R&S®NRP POWER METER FAMILY

Specifications

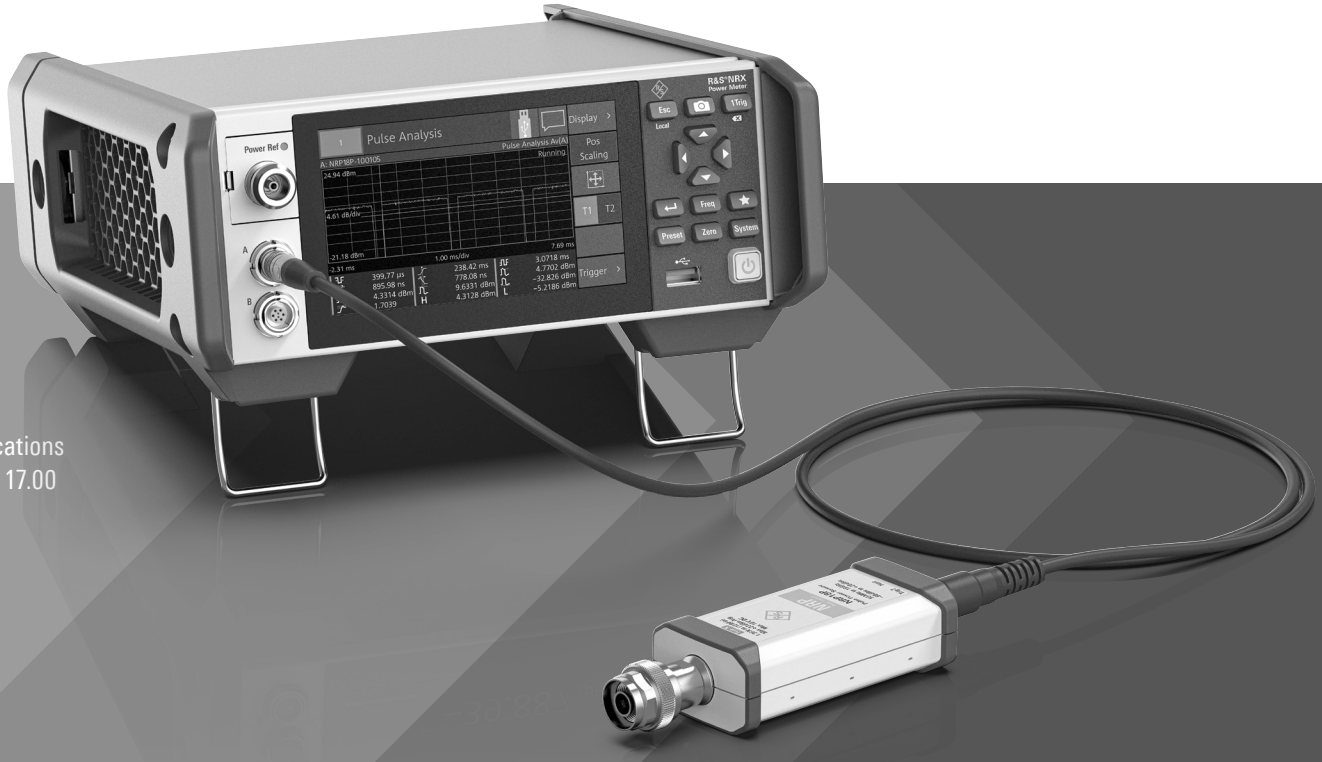

Specifications
Version 17.00

ROHDE&SCHWARZ
Make ideas real

CONTENTS

Definitions **4**

Overview of the R&S®NRP power sensors **5**

Specifications in brief of the R&S®NRP power sensors **6**

Multipath diode power sensors **10**

R&S®NRP8S(N)/18S(N)/33S(N) three-path diode power sensors,
R&S®NRP33SN-V TVAC-compliant three-path diode power sensor 10

R&S®NRP40S(N)/50S(N)/67S(N)/90S(N) three-path diode power sensors,
R&S®NRP67SN-V TVAC-compliant three-path diode power sensor 13

R&S®NRP18S-10 high-power three-path diode power sensor 18

R&S®NRP18S-20 high-power three-path diode power sensor 20

R&S®NRP18S-25 high-power three-path diode power sensor 22

Additional characteristics of the R&S®NRPxxS(N)/18S-10/18S-20/18S-25 three-path diode power sensors and
the R&S®NRP33SN-V/67SN-V TVAC-compliant three-path diode power sensors 24

Power rating of the R&S®NRP18S-10/-20/-25 27

Average power sensors **28**

R&S®NRP6A(N)/18A(N) average power sensors 28

Additional characteristics of the R&S®NRPxxA(N) average power sensors 31

Thermal power sensors **33**

R&S®NRP18T(N)/33T(N)/40T(N)/50T(N)/67T(N) thermal power sensors 33

R&S®NRP90T(N)/110T thermal power sensors 34

R&S®NRP125T thermal power sensors 35

Additional characteristics of the R&S®NRP18T(N)/33T(N)/40T(N)/50T(N)/67T(N)/90T(N)/110T/125T thermal power sensors 36

Thermal waveguide power sensors **39**

R&S®NRP75TWG(N)/90TWG(N)/110TWG(N)/140TWG(N)/170TWG(N) thermal waveguide power sensors 39

Additional characteristics of the R&S®NRP75TWG(N)/90TWG(N)/110TWG(N)/140TWG(N)/170TWG(N)
thermal waveguide power sensors 40

Accessories for R&S®NRP power sensors **42**

R&S®NRP-ZKU interface cables 42

R&S®NRP-ZKC interface cables 42

R&S®NRP-ZK6 interface cables 42

R&S®NRP-ZK8 interface cables 42

R&S®NRP-ZKVSRJ Ethernet cables for TVAC applications 43

R&S®NRP-ZKVSMD Ethernet cables for TVAC applications 43

R&S®NRP-ZKASMD Ethernet cables (air side cables) 43

General data for R&S®NRP power sensors and accessories **44**

R&S®NRX base unit **45**

Options for the R&S®NRX base unit **48**

Appendix **49**

Reading the uncertainty of multipath power sensors for relative power measurements 49

Technical drawings of the R&S®NRP33SN-V/-67SN-V TVAC-compliant three-path diode power sensor 50

Ordering information **51**

Warranty and service **53**

Endnotes **54**

Definitions

Product data applies under the following conditions:

- Three hours of storage at the expected operating temperature followed by 30 minutes of warm-up, unless otherwise stated
- Specified environmental conditions met
- Recommended calibration interval adhered to
- All internal automatic adjustments performed, if applicable

Specifications with limits
Represent warranted product performance by means of a range of values for the specified parameter. These specifications are marked with limiting symbols such as <, ≤, >, ≥, ± or descriptions such as maximum, limit of, minimum. Compliance is ensured by testing or is derived from the design. Test limits are narrowed by guard bands to take into account measurement uncertainties, drift and aging, if applicable.

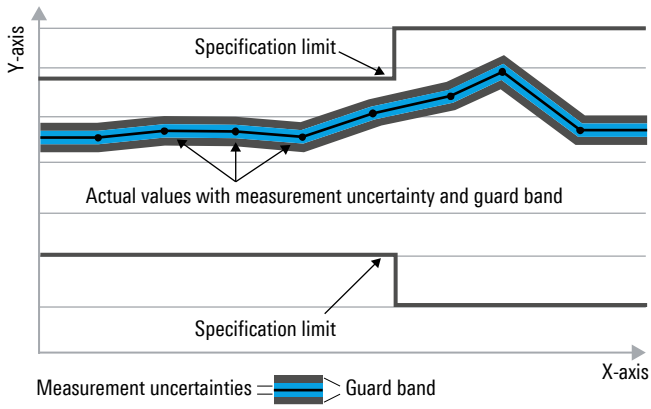

Specifications without limits
Represent warranted product performance for the specified parameter. These specifications are not specially marked and represent values with no or negligible deviations from the given value, e.g. dimensions or resolution of a setting parameter. Compliance is ensured by design.

Typical values (typ.)
Characterizes product performance by means of representative information for the given parameter. When marked with <, > or as a range, it represents the performance met by approximately 80 % of the instruments at production time. Otherwise, it represents the mean value.

Nominal values (nom.)
Characterize product performance by means of a representative value for the given parameter, e.g. nominal impedance. In contrast to typical data, a statistical evaluation does not take place and the parameter is not tested during production.

Measured values (meas.)
Characterize expected product performance by means of measurement results gained from individual samples.

Uncertainties
Represent limits of measurement uncertainty for a given measurand. Uncertainty is defined with a coverage factor of 2 and has been calculated in line with the rules of the Guide to the Expression of Uncertainty in Measurement (GUM), taking into account environmental conditions, aging, wear and tear.

Device settings and GUI parameters are indicated as follows: “parameter: value”.

Typical data as well as nominal and measured values are not warranted by Rohde & Schwarz.

In line with the 3GPP standard, chip rates are specified in million chips per second (Mcps), whereas bit rates and symbol rates are specified in billion bit per second (Gbps), million bit per second (Mbps), thousand bit per second (kbps), million symbols per second (Msps) or thousand symbols per second (ksps), and sample rates are specified in million samples per second (Msample/s). Gbps, Mcps, Mbps, Msps, kbps, ksps and Msample/s are not SI units.

Overview of the R&S®NRP power sensors

Sensor type R&S®	Frequency range	Power range, max. average power / peak envelope power	Connector type
Three-path diode power sensors			
NRP8S(N)	10 MHz to 8 GHz	100 pW to 200 mW (–70 dBm to +23 dBm) max. 1 W (AVG) / 2 W (PK, 10 µs)	N (m)
NRP18S(N)	10 MHz to 18 GHz	100 pW to 200 mW (–70 dBm to +23 dBm) max. 1 W (AVG) / 2 W (PK, 10 µs)	N (m)
NRP33S(N)/ NRP33SN-V	10 MHz to 33 GHz	100 pW to 200 mW (–70 dBm to +23 dBm) max. 1 W (AVG) / 2 W (PK, 10 µs)	3.50 mm (m)
NRP40S(N)	50 MHz to 40 GHz	100 pW to 100 mW (–70 dBm to +20 dBm) max. 200 mW (AVG) / 1 W (PK, 10 µs)	2.92 mm (m)
NRP50S(N)	50 MHz to 50 GHz	100 pW to 100 mW (–70 dBm to +20 dBm) max. 200 mW (AVG) / 1 W (PK, 10 µs)	2.40 mm (m)
NRP67S(N) NRP67SN-V	50 MHz to 67 GHz	100 pW to 100 mW (–70 dBm to +20 dBm) max. 200 mW (AVG) / 1 W (PK, 10 µs)	1.85 mm (m)
NRP90S(N)	50 MHz to 90 GHz	100 pW to 100 mW (–70 dBm to +20 dBm) max. 200 mW (AVG) / 1 W (PK, 10 µs)	1.35 mm (m) / 1.00 mm (m)
High-power three-path diode power sensors			
NRP18S-10	10 MHz to 18 GHz	1 nW to 2 W (−60 dBm to +33 dBm) max. 3 W (AVG) / 20 W (PK, 10 µs)	N (m)
NRP18S-20	10 MHz to 18 GHz	10 nW to 15 W (−50 dBm to +42 dBm) max. 18 W (AVG) / 100 W (PK, 10 µs)	N (m)
NRP18S-25	10 MHz to 18 GHz	30 nW to 30 W (−45 dBm to +45 dBm) max. 36 W (AVG) / 300 W (PK, 10 µs)	N (m)
Average power sensors			
NRP6A(N)	8 kHz to 6 GHz	100 pW to 200 mW (–70 dBm to +23 dBm) max. 1 W (AVG) / 2 W (PK, 10 µs)	N (m)
NRP18A(N)	8 kHz to 18 GHz	100 pW to 200 mW (–70 dBm to +23 dBm) max. 1 W (AVG) / 2 W (PK, 10 µs)	N (m)
Thermal power sensors			
NRP18T(N)	DC to 18 GHz	300 nW to 100 mW (–35 dBm to +20 dBm) max. 300 mW (AVG) / 20 W (PK, 1 µs)	N (m)
NRP33T(N)	DC to 33 GHz	300 nW to 100 mW (–35 dBm to +20 dBm) max. 300 mW (AVG) / 10 W (PK, 1 µs)	3.50 mm (m)
NRP40T(N)	DC to 40 GHz	300 nW to 100 mW (–35 dBm to +20 dBm) max. 300 mW (AVG) / 10 W (PK, 1 µs)	2.92 mm (m)
NRP50T(N)	DC to 50 GHz	300 nW to 100 mW (–35 dBm to +20 dBm) max. 300 mW (AVG) / 10 W (PK, 1 µs)	2.40 mm (m)
NRP67T(N)	DC to 67 GHz	300 nW to 100 mW (–35 dBm to +20 dBm) max. 300 mW (AVG) / 10 W (PK, 1 µs)	1.85 mm (m)
NRP90T(N)	DC to 90 GHz	300 nW to 100 mW (–35 dBm to +20 dBm) max. 300 mW (AVG) / 10 W (PK, 1 µs)	1.35 mm (m)
NRP110T	DC to 110 GHz	300 nW to 100 mW (–35 dBm to +20 dBm) max. 300 mW (AVG) / 10 W (PK, 1 µs)	1.00 mm (m)
NRP125T	DC to 125 GHz	300 nW to 100 mW (–35 dBm to +20 dBm) max. 300 mW (AVG) / 5 W (PK, 1 µs)	1.00 mm (m)
Thermal waveguide power sensors			
NRP75TWG(N)	50 GHz to 75 GHz	300 nW to 100 mW (–35 dBm to +20 dBm) max. 300 mW (AVG) / 10 W (PK, 1 µs)	WR15
NRP90TWG(N)	60 GHz to 90 GHz	300 nW to 100 mW (–35 dBm to +20 dBm) max. 300 mW (AVG) / 10 W (PK, 1 µs)	WR12
NRP110TWG(N)	75 GHz to 110 GHz	300 nW to 100 mW (–35 dBm to +20 dBm) max. 300 mW (AVG) / 10 W (PK, 1 µs)	WR10
NRP140TWG(N)	90 GHz to 140 GHz	300 nW to 100 mW (–35 dBm to +20 dBm) max. 300 mW (AVG) / 5 W (PK, 1 µs)	WR8
NRP170TWG(N)	110 GHz to 170 GHz	300 nW to 100 mW (–35 dBm to +20 dBm) max. 300 mW (AVG) / 5 W (PK, 1 µs)	WR6.5

Specifications in brief of the R&S®NRP power sensors

Sensor type R&S®	Impedance matching (SWR)	Rise time Video BW	Zero offset (typ.)	Noise (typ.)	Uncertainty for power measurements at +20 °C to +25 °C	
					absolute (in dB)	relative (in dB)
Three-path diode power sensors						
NRP8S(N)	10 MHz to 2.4 GHz: < 1.13 > 2.4 GHz to 8.0 GHz: < 1.20	< 5 µs > 100 kHz	28 pW	20 pW	*0.053 to 0.065*	*0.022 to 0.050*
NRP18S(N)	10 MHz to 2.4 GHz: < 1.13 > 2.4 GHz to 8.0 GHz: < 1.20 > 8.0 GHz to 18.0 GHz: < 1.25				*0.053 to 0.094*	*0.022 to 0.069*
NRP33S(N)/ NRP33SN-V	10 MHz to 2.4 GHz: < 1.13 > 2.4 GHz to 8.0 GHz: < 1.20 > 8.0 GHz to 18.0 GHz: < 1.25 > 18.0 GHz to 26.5 GHz: < 1.30 > 26.5 GHz to 33.0 GHz: < 1.35				*0.053 to 0.134*	*0.022 to 0.136*
NRP40S(N)	50 MHz to 2.4 GHz: < 1.13 > 2.4 GHz to 8.0 GHz: < 1.20 > 8.0 GHz to 18.0 GHz: < 1.25 > 18.0 GHz to 26.5 GHz: < 1.30 > 26.5 GHz to 33.0 GHz: < 1.35 > 33.0 GHz to 40.0 GHz: < 1.37				*0.073 to 0.138*	*0.028 to 0.142*
NRP50S(N)	50 MHz to 2.4 GHz: < 1.13 > 2.4 GHz to 8.0 GHz: < 1.20 > 8.0 GHz to 18.0 GHz: < 1.25 > 18.0 GHz to 26.5 GHz: < 1.30 > 26.5 GHz to 33.0 GHz: < 1.35 > 33.0 GHz to 40.0 GHz: < 1.37 > 40.0 GHz to 50.0 GHz: < 1.40				*0.073 to 0.183*	*0.028 to 0.184*
NRP67S(N) NRP67SN-V	50 MHz to 200 MHz: < 1.30 > 200 MHz to 2.4 GHz: < 1.13 > 2.4 GHz to 8.0 GHz: < 1.20 > 8.0 GHz to 18.0 GHz: < 1.25 > 18.0 GHz to 26.5 GHz: < 1.30 > 26.5 GHz to 33.0 GHz: < 1.35 > 33.0 GHz to 40.0 GHz: < 1.37 > 40.0 GHz to 50.0 GHz: < 1.40 > 50.0 GHz to 67.0 GHz: < 1.68				*0.073 to 0.255*	*0.028 to 0.266*
NRP90S(N)	50 MHz to 200 MHz: < 1.30 > 200 MHz to 2.4 GHz: < 1.13 > 2.4 GHz to 8.0 GHz: < 1.20 > 8.0 GHz to 18.0 GHz: < 1.25 > 18.0 GHz to 26.5 GHz: < 1.30 > 26.5 GHz to 40.0 GHz: < 1.38 > 40.0 GHz to 50.0 GHz: < 1.46 > 50.0 GHz to 67.0 GHz: < 1.68 > 67.0 GHz to 90.0 GHz: < 1.98				*0.073 to 0.300*	*0.028 to 0.320*

Sensor type R&S®	**Impedance matching (SWR)**	**Rise time Video BW**	**Zero offset (typ.)**	**Noise (typ.)**	**Uncertainty for power measurements at +20 °C to +25 °C**	
					absolute (in dB)	**relative (in dB)**
High-power three-path diode power sensors						
NRP18S-10	10 MHz to 2.4 GHz: < 1.14 > 2.4 GHz to 8.0 GHz: < 1.20 > 8.0 GHz to 12.4 GHz: < 1.25 > 12.4 GHz to 18.0 GHz: < 1.30	< 5 µs > 100 kHz	320 pW	230 pW	*0.083 to 0.198*	*0.022 to 0.087*
NRP18S-20	10 MHz to 2.4 GHz: < 1.14 > 2.4 GHz to 8.0 GHz: < 1.25 > 8.0 GHz to 12.4 GHz: < 1.30 > 12.4 GHz to 18.0 GHz: < 1.41		3.4 nW	2.4 nW	*0.083 to 0.198*	*0.022 to 0.087*
NRP18S-25	10 MHz to 2.4 GHz: < 1.14 > 2.4 GHz to 8.0 GHz: < 1.25 > 8.0 GHz to 12.4 GHz: < 1.30 > 12.4 GHz to 18.0 GHz: < 1.41		12 nW	8 nW	*0.083 to 0.219*	*0.022 to 0.087*
Average power sensors						
NRP6A(N)	8 kHz to < 20 kHz: < 1.25 20 kHz to 2.4 GHz: < 1.13 > 2.4 GHz to 6.0 GHz: < 1.20	–	28 pW	20 pW	*0.051 to 0.056*	*0.022 to 0.050*
NRP18A(N)	8 kHz to < 20 kHz: < 1.25 20 kHz to 2.4 GHz: < 1.13 > 2.4 GHz to 8.0 GHz: < 1.20 > 8.0 GHz to 18.0 GHz: < 1.25				*0.051 to 0.094*	*0.022 to 0.069*

Sensor type R&S®	Impedance matching (SWR)	Rise time Video BW	Zero offset (typ.)	Noise (typ.)	Uncertainty for power measurements at +20 °C to +25 °C	
					absolute (in dB)	relative (in dB)
Thermal power sensors						
NRP18T(N)	DC to 100 MHz: < 1.03 > 100 MHz to 2.4 GHz: < 1.06 > 2.4 GHz to 12.4 GHz: < 1.13 > 12.4 GHz to 18.0 GHz: < 1.16	–	15 nW	15 nW	*0.040 to 0.082*	*0.010*
NRP33T(N)	DC to 100 MHz: < 1.03 > 100 MHz to 2.4 GHz: < 1.06 > 2.4 GHz to 12.4 GHz: < 1.13 > 12.4 GHz to 18.0 GHz: < 1.16 > 18.0 GHz to 26.5 GHz: < 1.22 > 26.5 GHz to 33.0 GHz: < 1.28				*0.040 to 0.101*	*0.010*
NRP40T(N)	DC to 100 MHz: < 1.03 > 100 MHz to 2.4 GHz: < 1.06 > 2.4 GHz to 12.4 GHz: < 1.13 > 12.4 GHz to 18.0 GHz: < 1.16 > 18.0 GHz to 26.5 GHz: < 1.22 > 26.5 GHz to 40.0 GHz: < 1.28				*0.040 to 0.108*	*0.010*
NRP50T(N)	DC to 100 MHz: < 1.03 > 100 MHz to 2.4 GHz: < 1.06 > 2.4 GHz to 12.4 GHz: < 1.13 > 12.4 GHz to 18.0 GHz: < 1.16 > 18.0 GHz to 26.5 GHz: < 1.22 > 26.5 GHz to 40.0 GHz: < 1.28 > 40.0 GHz to 50.0 GHz: < 1.30				*0.040 to 0.143*	*0.010*
NRP67T(N)	DC to 100 MHz: < 1.03 > 100 MHz to 2.4 GHz: < 1.06 > 2.4 GHz to 12.4 GHz: < 1.13 > 12.4 GHz to 18.0 GHz: < 1.16 > 18.0 GHz to 26.5 GHz: < 1.22 > 26.5 GHz to 40.0 GHz: < 1.28 > 40.0 GHz to 50.0 GHz: < 1.30 > 50.0 GHz to 67.0 GHz: < 1.35				*0.040 to 0.209*	*0.010*
NRP90T(N)	DC to 100 MHz: < 1.05 > 100 MHz to 2.4 GHz: < 1.08 > 2.4 GHz to 12.4 GHz: < 1.18 > 12.4 GHz to 18.0 GHz: < 1.23 > 18.0 GHz to 26.5 GHz: < 1.28 > 26.5 GHz to 40.0 GHz: < 1.38 > 40.0 GHz to 50.0 GHz: < 1.46 > 50.0 GHz to 67.0 GHz: < 1.56 > 67.0 GHz to 80.0 GHz: < 1.60 > 80.0 GHz to 90.0 GHz: < 1.66				*0.041 to 0.269*	*0.010 to 0.014*
NRP110T	DC to 100 MHz: < 1.05 > 100 MHz to 2.4 GHz: < 1.08 > 2.4 GHz to 12.4 GHz: < 1.18 > 12.4 GHz to 18.0 GHz: < 1.23 > 18.0 GHz to 26.5 GHz: < 1.28 > 26.5 GHz to 40.0 GHz: < 1.38 > 40.0 GHz to 50.0 GHz: < 1.46 > 50.0 GHz to 67.0 GHz: < 1.56 > 67.0 GHz to 80.0 GHz: < 1.60 > 80.0 GHz to 95.0 GHz: < 1.66 > 95.0 GHz to 110 GHz: < 1.70				*0.041 to 0.290*	*0.010 to 0.014*

Sensor type R&S®	**Impedance matching (SWR)**	**Rise time Video BW**	**Zero offset (typ.)**	**Noise (typ.)**	**Uncertainty for power measurements at +20 °C to +25 °C**	
					absolute (in dB)	**relative (in dB)**
Thermal power sensors						
NRP125T	DC to 100 MHz: < 1.05 > 100 MHz to 2.4 GHz: < 1.10 > 2.4 GHz to 12.4 GHz: < 1.16 > 12.4 GHz to 18.0 GHz: < 1.18 > 18.0 GHz to 26.5 GHz: < 1.22 > 26.5 GHz to 40.0 GHz: < 1.28 > 40.0 GHz to 50.0 GHz: < 1.30 > 50.0 GHz to 67.0 GHz: < 1.35 > 67.0 GHz to 80.0 GHz: < 1.46 > 80.0 GHz to 95.0 GHz: < 1.57 > 95.0 GHz to 110 GHz: < 1.66 > 110 GHz to 125 GHz: < 1.70	–	15 nW	15 nW	*0.041 to 0.325*	*0.010 to 0.020*
Thermal waveguide power sensors						
NRP75TWG(N)	50 GHz to 75 GHz: < 1.35	–	20 nW	20 nW	*0.190*	*0.014*
NRP90TWG(N)	60 GHz to 90 GHz: < 1.35				*0.194*	*0.014*
NRP110TWG(N)	75 GHz to 110 GHz: < 1.35				*0.198*	*0.014*
NRP140TWG(N)	90 GHz to 140 GHz: < 1.35		24 nW	24 nW	*0.200 to 0.238*	*0.014 to 0.020*
NRP170TWG(N)	110 GHz to 170 GHz: < 1.35		24 nW	24 nW	*0.236 to 0.260*	*0.020*

Multipath diode power sensors

R&S®NRP8S(N)/18S(N)/33S(N) three-path diode power sensors, R&S®NRP33SN-V TVAC-compliant three-path diode power sensor

Specifications from 10 MHz to 8 GHz apply to the R&S®NRP8S(N).
Specifications from 10 MHz to 18 GHz apply to the R&S®NRP18S(N).
Specifications from 10 MHz to 33 GHz apply to the R&S®NRP33S(N)/NRP33SN-V.

Frequency range	R&S®NRP8S(N)	10 MHz to 8 GHz	
	R&S®NRP18S(N)	10 MHz to 18 GHz	
	R&S®NRP33S(N)/NRP33SN-V	10 MHz to 33 GHz	
Impedance matching (SWR)	10 MHz to 2.4 GHz	< 1.13 (1.11)	( ): +15 °C to +35 °C
	> 2.4 GHz to 8.0 GHz	< 1.20 (1.18)	
	> 8.0 GHz to 18.0 GHz	< 1.25 (1.23)	
	> 18.0 GHz to 26.5 GHz	< 1.30 (1.28)	
	> 26.5 GHz to 33.0 GHz	< 1.35 (1.33)	
Power measurement range	continuous average	100 pW to 200 mW (–70 dBm to +23 dBm)	
	burst average	300 nW to 200 mW (–35 dBm to +23 dBm)	
	timeslot/gate average	300 pW to 200 mW (–65 dBm to +23 dBm) [1]	
	trace	2 nW to 200 mW (–57 dBm to +23 dBm) [2]	
Maximum power	average power	1 W (+30 dBm) AVG, max. 10 V DC	
	peak envelope power	2 W (+33 dBm) for max. 10 µs	
Measurement subranges	path 1	–70 dBm to –15 dBm	
	path 2	–53 dBm to +5 dBm	
	path 3	–33 dBm to +23 dBm	
Transition regions	with automatic path selection [3]	(–20 ± 1) dBm to (–14 ± 1) dBm (0 ± 1) dBm to (+6 ± 1) dBm	
Dynamic response	video bandwidth	> 100 kHz (150 kHz)	( ): +15 °C to +35 °C
	rise time 10 %/90 %	< 5 µs (3 µs)	
Acquisition	sample rate (continuous)	2 Msps	
	accuracy of time base	±5 ppm	
Triggering	internal		
	threshold level range	–38 dBm to +23 dBm	
	threshold level accuracy	identical to uncertainty for absolute power measurements	
	threshold level hysteresis	0 dB to 10 dB	
	dropout [4]	0 s to 10 s	
	external	EXTernal[1]: R&S®NRX/NRP2 or R&S®NRP-Z5	
		EXTernal2: coaxial trigger I/O	
	slope (external, internal)	pos./neg.	
	delay	–5 s to +10 s	
	hold-off	0 s to 10 s	
	resolution (delay, hold-off, dropout)	0.5 µs (sample period)	
	source	INTernal, EXTernal[1], EXTernal2, IMMediate, BUS, HOLD	
Zero offset	initial, without zeroing		( ): typical at 1 GHz +15 °C to +35 °C [ ]: at frequencies ≤ 18 GHz
	path 1	< 250 [235] (50) pW	
	path 2	< 10.5 [10.3] (2.2) nW	
	path 3	< 1.10 [0.93] (0.19) µW	
	after external zeroing [5]		
	path 1	< 53 [49] (28) pW	
	path 2	< 2.2 [2.1] (1.3) nW	
	path 3	< 224 [192] (108) nW	
Zero drift [6]	path 1	< 13 [12] (2) pW	
	path 2	< 0.6 [0.5] (0.1) nW	
	path 3	< 54 [47] (8) nW	
Measurement noise [7]	path 1	< 37 [35] (20) pW	
	path 2	< 1.6 [1.5] (0.9) nW	
	path 3	< 158 [136] (76) nW	

Uncertainty for absolute power measurements [8] in dB

10 MHz to < 20 MHz

0.224	*0.187*	*0.181*
0.098	*0.087*	*0.085*
0.058	*0.053*	*0.053*

–70 –20 0 +23

Power level in dBm

20 MHz to < 100 MHz

0.195	*0.177*	*0.172*
0.089	*0.085*	*0.083*
0.055	*0.054*	*0.054*

–70 –20 0 +23

Power level in dBm

0 °C to +50 °C
+15 °C to +35 °C
+20 °C to +25 °C

100 MHz to 2.4 GHz

0.161	*0.168*	*0.163*
0.084	*0.086*	*0.085*
0.060	*0.059*	*0.060*

–70 –20 0 +23

Power level in dBm

> 2.4 GHz to 8 GHz

0.162	*0.168*	*0.164*
0.088	*0.089*	*0.088*
0.065	*0.063*	*0.064*

–70 –20 0 +23

Power level in dBm

0 °C to +50 °C
+15 °C to +35 °C
+20 °C to +25 °C

> 8 GHz to 12.4 GHz

0.166	*0.172*	*0.166*
0.096	*0.096*	*0.095*
0.076	*0.073*	*0.074*

–70 –20 0 +23

Power level in dBm

> 12.4 GHz to 18 GHz

0.174	*0.182*	*0.178*
0.110	*0.111*	*0.112*
0.092	*0.090*	*0.094*

–70 –20 0 +23

Power level in dBm

0 °C to +50 °C
+15 °C to +35 °C
+20 °C to +25 °C

> 18 GHz to 26.5 GHz

0.178	*0.194*	*0.196*
0.112	*0.117*	*0.125*
0.093	*0.093*	*0.105*

–70 –20 0 +23

Power level in dBm

> 26.5 GHz to 33 GHz

0.194	*0.217*	*0.226*
0.131	*0.138*	*0.155*
0.114	*0.114*	*0.134*

–70 –20 0 +23

Power level in dBm

0 °C to +50 °C
+15 °C to +35 °C
+20 °C to +25 °C

Uncertainty for relative power measurements [9] in dB

10 MHz to < 20 MHz

Power level in dBm	–70	–20	–14	0	+6	+23
+23	0.267	0.239	0.027			
	0.107	0.097	0.026			
+6	0.047	0.041	0.026			
0	0.260	0.028	0.239			
	0.103	0.024	0.097			
–14	0.044	0.023	0.041			
–20	0.022	0.260	0.267			
	0.022	0.103	0.107			
–70	0.022	0.044	0.047			

20 MHz to < 100 MHz

Power level in dBm	–70	–20	–14	0	+6	+23	
+23	0.242	0.228	0.027				0 °C to +50 °C
	0.100	0.096	0.026				+15 °C to +35 °C
+6	0.045	0.041	0.026				+20 °C to +25 °C
0	0.235	0.028	0.228				0 °C to +50 °C
	0.097	0.024	0.096				+15 °C to +35 °C
–14	0.043	0.023	0.041				+20 °C to +25 °C
–20	0.022	0.235	0.242				0 °C to +50 °C
	0.022	0.097	0.100				+15 °C to +35 °C
–70	0.022	0.043	0.045				+20 °C to +25 °C

100 MHz to 2.4 GHz

Power level in dBm	–70	–20	–14	0	+6	+23
+23	0.213	0.217	0.027			
	0.093	0.093	0.026			
+6	0.045	0.040	0.026			
0	0.208	0.028	0.217			
	0.090	0.024	0.093			
–14	0.043	0.023	0.040			
–20	0.022	0.208	0.213			
	0.022	0.090	0.093			
–70	0.022	0.043	0.045			

> 2.4 GHz to 8 GHz

Power level in dBm	–70	–20	–14	0	+6	+23	
+23	0.211	0.214	0.027				0 °C to +50 °C
	0.095	0.093	0.026				+15 °C to +35 °C
+6	0.050	0.042	0.026				+20 °C to +25 °C
0	0.205	0.028	0.214				0 °C to +50 °C
	0.092	0.024	0.093				+15 °C to +35 °C
–14	0.047	0.023	0.042				+20 °C to +25 °C
–20	0.022	0.205	0.211				0 °C to +50 °C
	0.022	0.092	0.095				+15 °C to +35 °C
–70	0.022	0.047	0.050				+20 °C to +25 °C

> 8 GHz to 12.4 GHz

Power level in dBm	–70	–20	–14	0	+6	+23
+23	0.212	0.215	0.029			
	0.099	0.097	0.027			
+6	0.056	0.048	0.027			
0	0.207	0.029	0.215			
	0.095	0.025	0.097			
–14	0.052	0.024	0.048			
–20	0.022	0.207	0.212			
	0.022	0.095	0.099			
–70	0.022	0.052	0.056			

> 12.4 GHz to 18 GHz

Power level in dBm	–70	–20	–14	0	+6	+23	
+23	0.219	0.223	0.034				0 °C to +50 °C
	0.109	0.108	0.033				+15 °C to +35 °C
+6	0.069	0.064	0.032				+20 °C to +25 °C
0	0.212	0.031	0.223				0 °C to +50 °C
	0.102	0.027	0.108				+15 °C to +35 °C
–14	0.061	0.026	0.064				+20 °C to +25 °C
–20	0.022	0.212	0.219				0 °C to +50 °C
	0.022	0.102	0.109				+15 °C to +35 °C
–70	0.022	0.061	0.069				+20 °C to +25 °C

> 18 GHz to 26.5 GHz

Power level in dBm	–70	–20	–14	0	+6	+23
+23	0.242	0.254	0.049			
	0.134	0.139	0.049			
+6	0.098	0.099	0.049			
0	0.231	0.038	0.254			
	0.119	0.034	0.139			
–14	0.079	0.032	0.099			
–20	0.022	0.231	0.242			
	0.022	0.119	0.134			
–70	0.022	0.079	0.098			

> 26.5 GHz to 33 GHz

Power level in dBm	–70	–20	–14	0	+6	+23	
+23	0.268	0.288	0.067				0 °C to +50 °C
	0.162	0.174	0.067				+15 °C to +35 °C
+6	0.129	0.136	0.067				+20 °C to +25 °C
0	0.252	0.047	0.288				0 °C to +50 °C
	0.137	0.042	0.174				+15 °C to +35 °C
–14	0.096	0.040	0.136				+20 °C to +25 °C
–20	0.023	0.252	0.268				0 °C to +50 °C
	0.023	0.137	0.162				+15 °C to +35 °C
–70	0.023	0.096	0.129				+20 °C to +25 °C

R&S®NRP40S(N)/50S(N)/67S(N)/90S(N) three-path diode power sensors, R&S®NRP67SN-V TVAC-compliant three-path diode power sensor

Specifications from 50 MHz to 40 GHz apply to the R&S®NRP40S(N).
Specifications from 50 MHz to 50 GHz apply to the R&S®NRP50S(N).
Specifications from 50 MHz to 67 GHz apply to the R&S®NRP67S(N)/NRP67SN-V.
Specifications from 50 MHz to 90 GHz apply to the R&S®NRP90S(N).

Frequency range	R&S®NRP40S(N)	50 MHz to 40 GHz	
	R&S®NRP50S(N)	50 MHz to 50 GHz	
	R&S®NRP67S(N)/NRP67SN-V	50 MHz to 67 GHz	
	R&S®NRP90S(N)	50 MHz to 90 GHz	
Impedance matching (SWR)	R&S®NRP40S(N), R&S®NRP50S(N)		
	50 MHz to 2.4 GHz	< 1.13 (1.11)	( ): +15 °C to +35 °C
	> 2.4 GHz to 8.0 GHz	< 1.20 (1.18)	
	> 8.0 GHz to 18.0 GHz	< 1.25 (1.23)	
	> 18.0 GHz to 26.5 GHz	< 1.30 (1.28)	
	> 26.5 GHz to 33.0 GHz	< 1.35 (1.33)	
	> 33.0 GHz to 40.0 GHz	< 1.37 (1.35)	
	> 40.0 GHz to 50.0 GHz	< 1.40 (1.38)	
	R&S®NRP67S(N), R&S®NRP67SN-V		
	50 MHz to 200 MHz	< 1.30 (1.28)	( ): +15 °C to +35 °C
	> 200 MHz to 2.4 GHz	< 1.13 (1.11)	
	> 2.4 GHz to 8.0 GHz	< 1.20 (1.18)	
	> 8.0 GHz to 18.0 GHz	< 1.25 (1.23)	
	> 18.0 GHz to 26.5 GHz	< 1.30 (1.28)	
	> 26.5 GHz to 33.0 GHz	< 1.35 (1.33)	
	> 33.0 GHz to 40.0 GHz	< 1.37 (1.35)	
	> 40.0 GHz to 50.0 GHz	< 1.40 (1.38)	
	> 50.0 GHz to 67.0 GHz	< 1.68 (1.66)	
	R&S®NRP90S(N)		
	50 MHz to 200 MHz	< 1.30 (1.28)	( ): +15 °C to +35 °C
	> 200 MHz to 2.4 GHz	< 1.13 (1.11)	
	> 2.4 GHz to 8.0 GHz	< 1.20 (1.18)	
	> 8.0 GHz to 18.0 GHz	< 1.25 (1.23)	
	> 18.0 GHz to 26.5 GHz	< 1.30 (1.28)	
	> 26.5 GHz to 40.0 GHz	< 1.38 (1.36)	
	> 40.0 GHz to 50.0 GHz	< 1.46 (1.44)	
	> 50.0 GHz to 67.0 GHz	< 1.68 (1.66)	
	> 67.0 GHz to 90.0 GHz	< 1.98 (1.96)	
Power measurement range	continuous average	100 pW to 100 mW (–70 dBm to +20 dBm)	
	burst average	300 nW to 100 mW (–35 dBm to +20 dBm)	
	timeslot/gate average	300 pW to 100 mW (–65 dBm to +20 dBm) [1]	
	trace	2 nW to 100 mW (–57 dBm to +20 dBm) [2]	
Maximum power	average power	0.2 W (+23 dBm) AVG, max. 10 V DC	
	peak envelope power	1 W (+30 dBm) for max. 10 µs	
Measurement subranges	path 1	–70 dBm to –15 dBm	
	path 2	–53 dBm to +5 dBm	
	path 3	–33 dBm to +20 dBm	
Transition regions	with automatic path selection [3]	(–20 ± 3) dBm to (–14 ± 3) dBm (0 ± 3) dBm to (+6 ± 3) dBm	
Dynamic response	video bandwidth	> 100 kHz (150 kHz)	( ): +15 °C to +35 °C
	rise time 10 %/90 %	< 5 µs (3 µs)	
Acquisition	sample rate (continuous)	2 Msps	
	accuracy of time base	±5 ppm	

Triggering	internal				
	threshold level range	–38 dBm to +20 dBm			
	threshold level accuracy	identical to uncertainty for absolute power measurements			
	threshold level hysteresis	0 dB to 10 dB			
	dropout [4]	0 s to 10 s			
	external	EXTernal[1]: R&S®NRX/NRP2 or R&S®NRP-Z5			
		EXTernal2: coaxial trigger I/O			
	slope (external, internal)	pos./neg.			
	delay	–5 s to +10 s			
	hold-off	0 s to 10 s			
	resolution (delay, hold-off, dropout)	0.5 µs (sample period)			
	source	INTernal, EXTernal[1], EXTernal2, IMMediate, BUS, HOLD			
Zero offset	initial, without zeroing	Typ. at 1 GHz +15 °C to +35 °C	≤ 18 GHz	≤ 67 GHz	≤ 90 GHz
	path 1	< 50 pW	< 235 pW	< 280 pW	< 480 pW
	path 2	< 4.8 nW	< 22.0 nW	< 26.3 nW	< 46.0 nW
	path 3	< 0.23 µW	< 1.06 µW	< 1.34 µW	< 2.20 µW
	after external zeroing [5]	Typ. at 1 GHz +15 °C to +35 °C	≤ 18 GHz	≤ 67 GHz	≤ 90 GHz
	path 1	< 28 pW	< 49 pW	< 58 pW	< 100 pW
	path 2	< 2.7 nW	< 4.6 nW	< 5.5 nW	< 9.5 nW
	path 3	< 130 nW	< 220 nW	< 280 nW	< 450 nW
Zero drift [6]		Typ. at 1 GHz +15 °C to +35 °C	≤ 18 GHz	≤ 67 GHz	≤ 90 GHz
	path 1	< 2 pW	< 12 pW	< 14 pW	< 24 pW
	path 2	< 0.2 nW	< 1.1 nW	< 1.3 nW	< 2.3 nW
	path 3	< 9 nW	< 9 nW	< 67 nW	< 110 nW
Measurement noise [7]		Typ. at 1 GHz +15 °C to +35 °C	≤ 18 GHz	≤ 67 GHz	≤ 90 GHz
	path 1	< 20 pW	< 35 pW	< 41 pW	< 70 pW
	path 2	< 1.9 nW	< 3.3 nW	< 3.9 nW	< 6.7 nW
	path 3	< 90 nW	< 155 nW	< 196 nW	< 320 nW

Uncertainty for absolute power measurements [8] in dB

50 MHz to < 200 MHz

0.241	*0.196*	*0.193*
0.113	*0.098*	*0.099*
0.077	*0.073*	*0.077*

–70 –20 0 +20
Power level in dBm

200 MHz to 8 GHz

0.162	*0.172*	*0.171*
0.095	*0.094*	*0.097*
0.081	*0.074*	*0.078*

–70 –20 0 +20
Power level in dBm

0 °C to +50 °C
+15 °C to +35 °C
+20 °C to +25 °C

> 8 GHz to 12.4 GHz

0.152	*0.157*	*0.157*
0.103	*0.098*	*0.101*
0.090	*0.081*	*0.086*

–70 –20 0 +20
Power level in dBm

> 12.4 GHz to 18 GHz

0.165	*0.167*	*0.168*
0.117	*0.111*	*0.114*
0.104	*0.095*	*0.100*

–70 –20 0 +20
Power level in dBm

0 °C to +50 °C
+15 °C to +35 °C
+20 °C to +25 °C

> 18 GHz to 26.5 GHz

0.176	*0.176*	*0.180*
0.122	*0.114*	*0.120*
0.107	*0.095*	*0.103*

–70 –20 0 +20
Power level in dBm

> 26.5 GHz to 33 GHz

0.196	*0.196*	*0.203*
0.139	*0.131*	*0.140*
0.123	*0.111*	*0.122*

–70 –20 0 +20
Power level in dBm

0 °C to +50 °C
+15 °C to +35 °C
+20 °C to +25 °C

> 33 GHz to 40 GHz

0.216	*0.217*	*0.229*
0.152	*0.145*	*0.159*
0.134	*0.122*	*0.138*

–70 –20 0 +20
Power level in dBm

> 40 GHz to 50 GHz

0.257	*0.260*	*0.279*
0.188	*0.184*	*0.205*
0.169	*0.160*	*0.183*

–70 –20 0 +20
Power level in dBm

0 °C to +50 °C
+15 °C to +35 °C
+20 °C to +25 °C

> 50 GHz to 67 GHz

0.318	*0.327*	*0.357*
0.242	*0.243*	*0.278*
0.221	*0.217*	*0.255*

–70 –20 0 +20
Power level in dBm

> 67 GHz to 90 GHz

0.364	*0.377*	*0.388*
0.276	*0.294*	*0.319*
0.251	*0.269*	*0.300*

–70 –20 0 +20
Power level in dBm

0 °C to +50 °C
+15 °C to +35 °C
+20 °C to +25 °C

Uncertainty for relative power measurements [9] in dB

50 MHz to < 200 MHz

Power level in dBm			
+20	0.285	0.252	0.046
	0.127	0.117	0.045
+6	0.081	0.077	0.045
0	0.277	0.040	0.252
	0.121	0.038	0.117
–14	0.073	0.038	0.077
–20	0.028	0.277	0.285
	0.028	0.121	0.127
–70	0.028	0.073	0.081

200 MHz to < 8 GHz

Power level in dBm				
+20	0.214	0.221	0.047	0 °C to +50 °C
	0.109	0.109	0.047	+15 °C to +35 °C
+6	0.083	0.077	0.047	+20 °C to +25 °C
0	0.206	0.040	0.221	0 °C to +50 °C
	0.102	0.038	0.109	+15 °C to +35 °C
–14	0.076	0.038	0.077	+20 °C to +25 °C
–20	0.029	0.206	0.214	0 °C to +50 °C
	0.029	0.102	0.109	+15 °C to +35 °C
–70	0.029	0.076	0.083	+20 °C to +25 °C

> 8 GHz to 12.4 GHz

Power level in dBm			
+20	0.195	0.199	0.050
	0.111	0.108	0.049
+6	0.086	0.080	0.049
0	0.187	0.041	0.199
	0.104	0.039	0.108
–14	0.079	0.039	0.080
–20	0.029	0.187	0.195
	0.029	0.104	0.111
–70	0.029	0.079	0.086

> 12.4 GHz to 18 GHz

Power level in dBm				
+20	0.203	0.205	0.054	0 °C to +50 °C
	0.117	0.113	0.054	+15 °C to +35 °C
+6	0.092	0.085	0.054	+20 °C to +25 °C
0	0.194	0.043	0.205	0 °C to +50 °C
	0.109	0.041	0.113	+15 °C to +35 °C
–14	0.083	0.041	0.085	+20 °C to +25 °C
–20	0.030	0.194	0.203	0 °C to +50 °C
	0.030	0.109	0.117	+15 °C to +35 °C
–70	0.030	0.083	0.092	+20 °C to +25 °C

> 18 GHz to 26.5 GHz

Power level in dBm			
+20	0.226	0.227	0.064
	0.134	0.130	0.064
+6	0.106	0.099	0.064
0	0.214	0.048	0.227
	0.122	0.046	0.130
–14	0.092	0.046	0.099
–20	0.032	0.214	0.226
	0.032	0.122	0.134
–70	0.032	0.092	0.106

> 26.5 GHz to 33 GHz

Power level in dBm				
+20	0.252	0.254	0.074	0 °C to +50 °C
	0.153	0.151	0.074	+15 °C to +35 °C
+6	0.122	0.117	0.074	+20 °C to +25 °C
0	0.236	0.054	0.254	0 °C to +50 °C
	0.135	0.052	0.151	+15 °C to +35 °C
–14	0.101	0.051	0.117	+20 °C to +25 °C
–20	0.034	0.236	0.252	0 °C to +50 °C
	0.034	0.135	0.153	+15 °C to +35 °C
–70	0.034	0.101	0.122	+20 °C to +25 °C

> 33 GHz to 40 GHz

Power level in dBm			
+20	*0.285*	*0.289*	*0.088*
	0.176	*0.179*	*0.087*
+6	*0.141*	*0.142*	*0.087*
0	*0.263*	*0.062*	*0.289*
	0.151	*0.060*	*0.179*
–14	*0.111*	*0.059*	*0.142*
–20	*0.036*	*0.263*	*0.285*
	0.036	*0.151*	*0.176*
–70	*0.036*	*0.111*	*0.141*

> 40 GHz to 50 GHz

Power level in dBm				
+20	*0.336*	*0.344*	*0.110*	0 °C to +50 °C
	0.214	*0.224*	*0.110*	+15 °C to +35 °C
+6	*0.174*	*0.184*	*0.109*	+20 °C to +25 °C
0	*0.304*	*0.077*	*0.344*	0 °C to +50 °C
	0.174	*0.074*	*0.224*	+15 °C to +35 °C
–14	*0.126*	*0.073*	*0.184*	+20 °C to +25 °C
–20	*0.040*	*0.304*	*0.336*	0 °C to +50 °C
	0.040	*0.174*	*0.214*	+15 °C to +35 °C
–70	*0.040*	*0.126*	*0.174*	+20 °C to +25 °C

> 50 GHz to 67 GHz

Power level in dBm			
+20	*0.419*	*0.436*	*0.152*
	0.280	*0.307*	*0.151*
+6	*0.233*	*0.266*	*0.151*
0	*0.365*	*0.109*	*0.436*
	0.210	*0.105*	*0.307*
–14	*0.150*	*0.103*	*0.266*
–20	*0.047*	*0.365*	*0.419*
	0.047	*0.210*	*0.280*
–70	*0.047*	*0.150*	*0.233*

> 67 GHz to 90 GHz

Power level in dBm				
+20	*0.472*	*0.480*	*0.182*	0 °C to +50 °C
	0.322	*0.358*	*0.181*	+15 °C to +35 °C
+6	*0.271*	*0.320*	*0.180*	+20 °C to +25 °C
0	*0.409*	*0.140*	*0.480*	0 °C to +50 °C
	0.233	*0.135*	*0.358*	+15 °C to +35 °C
–14	*0.163*	*0.133*	*0.320*	+20 °C to +25 °C
–20	*0.058*	*0.409*	*0.472*	0 °C to +50 °C
	0.058	*0.233*	*0.322*	+15 °C to +35 °C
–70	*0.058*	*0.163*	*0.271*	+20 °C to +25 °C

R&S®NRP18S-10 high-power three-path diode power sensor

Specifications apply when the power sensor is operated together with the RF power attenuator supplied. Please refer to the specifications of the R&S®NRP18S when operating the power sensor section alone.

Frequency range		10 MHz to 18 GHz	
Impedance matching (SWR)	10 MHz to 2.4 GHz	< 1.14	
	> 2.4 GHz to 8.0 GHz	< 1.20	
	> 8.0 GHz to 12.4 GHz	< 1.25	
	> 12.4 GHz to 18.0 GHz	< 1.30	
Power measurement range	continuous average	1 nW to 2 W (−60 dBm to +33 dBm)	
	burst average	3 µW to 2 W (−25 dBm to +33 dBm)	
	timeslot/gate average	3 nW to 2 W (−55 dBm to +33 dBm) [1]	
	trace	20 nW to 2 W (−47 dBm to +33 dBm) [2]	
Maximum power	average power	3 W (+35 dBm) AVG	
	peak envelope power	20 W (+43 dBm) for max. 10 µs	
Measurement subranges	path 1	−60 dBm to −5 dBm	
	path 2	−43 dBm to +15 dBm	
	path 3	−23 dBm to +33 dBm	
Transition regions	with automatic path selection [3]	(−10 ± 1.5) dBm to (−4 ± 1.5) dBm (10 ± 1.5) dBm to (+16 ± 1.5) dBm	
Dynamic response	video bandwidth	> 100 kHz (150 kHz)	( ): +15 °C to +35 °C
	rise time 10 %/90 %	< 5 µs (3 µs)	
Acquisition	sample rate (continuous)	2 Msps	
	accuracy of time base	±5 ppm	
Triggering	internal		
	threshold level range	−27 dBm to +33 dBm	
	threshold level accuracy	identical to uncertainty for absolute power measurements	
	threshold level hysteresis	0 dB to 10 dB	
	dropout [4]	0 s to 10 s	
	external	EXTernal[1]: R&S®NRX/NRP2 or R&S®NRP-Z5	
		EXTernal2: coaxial trigger I/O	
	slope (external, internal)	pos./neg.	
	delay	−5 s to +10 s	
	hold-off	0 s to 10 s	
	resolution (delay, hold-off, dropout)	0.5 µs (sample period)	
	source	INTernal, EXTernal[1], EXTernal2, IMMediate, BUS, HOLD	
Zero offset	initial, without zeroing		( ): typical at 1 GHz +15 °C to +35 °C
	path 1	< 2.9 (0.6) nW	
	path 2	< 120 (25) nW	
	path 3	< 12.3 (2.2) µW	
	after external zeroing [5]		
	path 1	< 600 (320) pW	
	path 2	< 26 (14) nW	
	path 3	< 2.6 (1.2) µW	
Zero drift [6]	path 1	< 145 (23) pW	
	path 2	< 6.0 (1.0) nW	
	path 3	< 615 (90) nW	
Measurement noise [7]	path 1	< 425 (230) pW	
	path 2	< 18 (10) nW	
	path 3	< 1.8 (0.9) µW	

Uncertainty for absolute power measurements [8] in dB

10 MHz to < 100 MHz

−60	+20	+30	+32	+33	
0.238	0.218	0.244	0.268		0 °C to +50 °C
0.117	0.140	0.179	0.210		+15 °C to +35 °C
0.083	0.120	0.163	0.198		+20 °C to +25 °C

Power level in dBm

100 MHz to 2.4 GHz

−60	+20	+30	+32	+33	
0.186	0.195	0.212	0.228		0 °C to +50 °C
0.108	0.127	0.153	0.174		+15 °C to +35 °C
0.085	0.109	0.138	0.162		+20 °C to +25 °C

Power level in dBm

> 2.4 GHz to 12.4 GHz

−60	+20	+30	+32	+33	
0.193	0.205	0.221	0.237		0 °C to +50 °C
0.128	0.145	0.168	0.188		+15 °C to +35 °C
0.103	0.124	0.150	0.176		+20 °C to +25 °C

Power level in dBm

> 12.4 GHz to 18 GHz

−60	+20	+30	+32	+33	
0.208	0.219	0.234	0.249		0 °C to +50 °C
0.147	0.162	0.183	0.201		+15 °C to +35 °C
0.123	0.140	0.164	0.190		+20 °C to +25 °C

Power level in dBm

Uncertainty for relative power measurements [9, 10] in dB

10 MHz to < 100 MHz

	−60	−10	−4	+10	+16	+30	
+30	0.356	0.316	0.028				0 °C to +50 °C
	0.162	0.147	0.026				+15 °C to +35 °C
+16	0.076	0.069	0.026				+20 °C to +25 °C
+10	0.347	0.032	0.316				0 °C to +50 °C
	0.157	0.025	0.147				+15 °C to +35 °C
−4	0.073	0.024	0.069				+20 °C to +25 °C
−10	0.022	0.347	0.356				0 °C to +50 °C
	0.022	0.157	0.162				+15 °C to +35 °C
−60	0.022	0.073	0.076				+20 °C to +25 °C

Power level in dBm

100 MHz to < 2.4 GHz

	−60	−10	−4	+10	+16	+30	
+30	0.273	0.278	0.028				0 °C to +50 °C
	0.136	0.138	0.026				+15 °C to +35 °C
+16	0.068	0.067	0.026				+20 °C to +25 °C
+10	0.266	0.032	0.278				0 °C to +50 °C
	0.133	0.025	0.138				+15 °C to +35 °C
−4	0.066	0.024	0.067				+20 °C to +25 °C
−10	0.022	0.266	0.273				0 °C to +50 °C
	0.022	0.133	0.136				+15 °C to +35 °C
−60	0.022	0.066	0.068				+20 °C to +25 °C

Power level in dBm

> 2.4 GHz to 12.4 GHz

	−60	−10	−4	+10	+16	+30
+30	0.269	0.274	0.030			
	0.139	0.140	0.028			
+16	0.076	0.072	0.027			
+10	0.262	0.033	0.274			
	0.136	0.026	0.140			
−4	0.073	0.024	0.072			
−10	0.022	0.262	0.269			
	0.022	0.136	0.139			
−60	0.022	0.073	0.076			

> 12.4 GHz to 18 GHz

	−60	−10	−4	+10	+16	+30	
+30	0.275	0.280	0.034				0 °C to +50 °C
	0.148	0.150	0.033				+15 °C to +35 °C
+16	0.087	0.085	0.033				+20 °C to +25 °C
+10	0.266	0.035	0.280				0 °C to +50 °C
	0.142	0.028	0.150				+15 °C to +35 °C
−4	0.080	0.026	0.085				+20 °C to +25 °C
−10	0.022	0.266	0.275				0 °C to +50 °C
	0.022	0.142	0.148				+15 °C to +35 °C
−60	0.022	0.080	0.087				+20 °C to +25 °C

R&S®NRP18S-20 high-power three-path diode power sensor

Specifications apply when the power sensor is operated together with the RF power attenuator supplied. Please refer to the specifications of the R&S®NRP18S when operating the power sensor section alone.

Frequency range		10 MHz to 18 GHz	
Impedance matching (SWR)	10 MHz to 2.4 GHz	< 1.14	
	> 2.4 GHz to 8.0 GHz	< 1.25	
	> 8.0 GHz to 12.4 GHz	< 1.30	
	> 12.4 GHz to 18.0 GHz	< 1.41	
Power measurement range	continuous average	10 nW to 15 W (−50 dBm to +42 dBm)	
	burst average	30 µW to 15 W (−15 dBm to +42 dBm)	
	timeslot/gate average	30 nW to 15 W (−45 dBm to +42 dBm) [1]	
	trace	200 nW to 15 W (−37 dBm to +42 dBm) [2]	
Maximum power	average power	18 W (+42.5 dBm) AVG	
	peak envelope power	100 W (+50 dBm) for max. 10 µs	
Measurement subranges	path 1	−50 dBm to +5 dBm	
	path 2	−33 dBm to +25 dBm	
	path 3	−13 dBm to +42 dBm	
Transition regions	with automatic path selection [3]	(0 ± 1.75) dBm to (+6 ± 1.75) dBm (20 ± 1.75) dBm to (+26 ± 1.75) dBm	
Dynamic response	video bandwidth	> 100 kHz (150 kHz)	( ): +15 °C to +35 °C
	rise time 10 %/90 %	< 5 µs (3 µs)	
Acquisition	sample rate (continuous)	2 Msps	
	accuracy of time base	±5 ppm	
Triggering	Internal		
	threshold level range	−17 dBm to +42 dBm	
	threshold level accuracy	identical to uncertainty for absolute power measurements	
	threshold level hysteresis	0 dB to 10 dB	
	dropout [4]	0 s to 10 s	
	external	EXTernal[1]: R&S®NRX/NRP2 or R&S®NRP-Z5	
		EXTernal2: coaxial trigger I/O	
	slope (external, internal)	pos./neg.	
	delay	−5 s to +10 s	
	hold-off	0 s to 10 s	
	resolution (delay, hold-off, dropout)	0.5 µs (sample period)	
	source	INTernal, EXTernal[1], EXTernal2, IMMediate, BUS, HOLD	
Zero offset	initial, without zeroing		( ): typical at 1 GHz +15 °C to +35 °C
	path 1	< 30 (6) nW	
	path 2	< 1.30 (0.26) µW	
	path 3	< 130 (23) µW	
	after external zeroing [5]		
	path 1	< 6.3 (3.4) nW	
	path 2	< 270 (150) nW	
	path 3	< 27 (13) µW	
Zero drift [6]	path 1	< 1.5 (0.24) nW	
	path 2	< 63 (11) nW	
	path 3	< 6.5 (1.0) µW	
Measurement noise [7]	path 1	< 4.5 (2.4) nW	
	path 2	< 190 (110) nW	
	path 3	< 19 (9) µW	

Uncertainty for absolute power measurements [8] in dB

10 MHz to < 100 MHz

0.256	*0.223*	*0.244*	*0.276*	0 °C to +50 °C
0.124	*0.123*	*0.157*	*0.204*	+15 °C to +35 °C
0.083	*0.090*	*0.133*	*0.186*	+20 °C to +25 °C
−50	+30	+36	+40	+42

Power level in dBm

100 MHz to 2.4 GHz

0.208	*0.208*	*0.226*	*0.253*	0 °C to +50 °C
0.116	*0.121*	*0.149*	*0.188*	+15 °C to +35 °C
0.085	*0.093*	*0.127*	*0.172*	+20 °C to +25 °C
−50	+30	+36	+40	+42

Power level in dBm

> 2.4 GHz to 12.4 GHz

0.218	*0.221*	*0.237*	*0.264*	0 °C to +50 °C
0.140	*0.145*	*0.169*	*0.204*	+15 °C to +35 °C
0.107	*0.113*	*0.143*	*0.183*	+20 °C to +25 °C
−50	+30	+36	+40	+42

Power level in dBm

> 12.4 GHz to 18 GHz

0.236	*0.239*	*0.254*	*0.279*	0 °C to +50 °C
0.165	*0.169*	*0.189*	*0.222*	+15 °C to +35 °C
0.130	*0.135*	*0.160*	*0.198*	+20 °C to +25 °C
−50	+30	+36	+40	+42

Power level in dBm

Uncertainty for relative power measurements [9, 10] in dB

10 MHz to < 100 MHz

+40	*0.356*	*0.316*	*0.028*	
	0.162	*0.147*	*0.026*	
+26	*0.076*	*0.069*	*0.026*	
+20	*0.347*	*0.032*	*0.316*	
	0.157	*0.025*	*0.147*	
+6	*0.073*	*0.024*	*0.069*	
0	*0.022*	*0.347*	*0.356*	
	0.022	*0.157*	*0.162*	
−50	*0.022*	*0.073*	*0.076*	
	−50	0 +6	+20 +26	+40

Power level in dBm

100 MHz to < 2.4 GHz

+40	*0.273*	*0.278*	*0.028*	0 °C to +50 °C
	0.136	*0.138*	*0.026*	+15 °C to +35 °C
+26	*0.068*	*0.067*	*0.026*	+20 °C to +25 °C
+20	*0.266*	*0.032*	*0.278*	0 °C to +50 °C
	0.133	*0.025*	*0.138*	+15 °C to +35 °C
+6	*0.066*	*0.024*	*0.067*	+20 °C to +25 °C
0	*0.022*	*0.266*	*0.273*	0 °C to +50 °C
	0.022	*0.133*	*0.136*	+15 °C to +35 °C
−50	*0.022*	*0.066*	*0.068*	+20 °C to +25 °C
	−50	0 +6	+20 +26	+40

Power level in dBm

> 2.4 GHz to 12.4 GHz

+40	*0.269*	*0.274*	*0.030*	
	0.139	*0.140*	*0.028*	
+26	*0.076*	*0.072*	*0.027*	
+20	*0.262*	*0.033*	*0.274*	
	0.136	*0.026*	*0.140*	
+6	*0.073*	*0.024*	*0.072*	
0	*0.022*	*0.262*	*0.269*	
	0.022	*0.136*	*0.139*	
−50	*0.022*	*0.073*	*0.076*	
	−50	0 +6	+20 +26	+40

> 12.4 GHz to 18 GHz

+40	*0.275*	*0.280*	*0.034*	0 °C to +50 °C
	0.148	*0.150*	*0.033*	+15 °C to +35 °C
+26	*0.087*	*0.085*	*0.033*	+20 °C to +25 °C
+20	*0.266*	*0.035*	*0.280*	0 °C to +50 °C
	0.142	*0.028*	*0.150*	+15 °C to +35 °C
+6	*0.080*	*0.026*	*0.085*	+20 °C to +25 °C
0	*0.022*	*0.266*	*0.275*	0 °C to +50 °C
	0.022	*0.142*	*0.148*	+15 °C to +35 °C
−50	*0.022*	*0.080*	*0.087*	+20 °C to +25 °C
	−50	0 +6	+20 +26	+40

R&S®NRP18S-25 high-power three-path diode power sensor

Specifications apply when the power sensor is operated together with the RF power attenuator supplied. Please refer to the specifications of the R&S®NRP18S when operating the power sensor section alone.

Frequency range		10 MHz to 18 GHz	
Impedance matching (SWR)	10 MHz to 2.4 GHz	< 1.14	
	> 2.4 GHz to 8.0 GHz	< 1.25	
	> 8.0 GHz to 12.4 GHz	< 1.30	
	> 12.4 GHz to 18.0 GHz	< 1.41	
Power measurement range	continuous average	30 nW to 30 W (−45 dBm to +45 dBm)	
	burst average	100 µW to 30 W (−10 dBm to +45 dBm)	
	timeslot/gate average	100 nW to 30 W (−40 dBm to +45 dBm) [1]	
	trace	600 nW to 30 W (−32 dBm to +45 dBm) [2]	
Maximum power	average power	36 W (+45.5 dBm) AVG	
	peak envelope power	300 W (+55 dBm) for max. 10 µs	
Measurement subranges	path 1	−45 dBm to +10 dBm	
	path 2	−28 dBm to +30 dBm	
	path 3	−8 dBm to +45 dBm	
Transition regions	with automatic path selection [3]	(+5 ± 2) dBm to (+11 ± 2) dBm (25 ± 2) dBm to (+31 ± 2) dBm	
Dynamic response	video bandwidth	> 100 kHz (150 kHz)	( ): +15 °C to +35 °C
	rise time 10 %/90 %	< 5 µs (3 µs)	
Acquisition	sample rate (continuous)	2 Msps	
	accuracy of time base	±5 ppm	
Triggering	Internal		
	threshold level range	−12 dBm to +45 dBm	
	threshold level accuracy	identical to uncertainty for absolute power measurements	
	threshold level hysteresis	0 dB to 10 dB	
	dropout [4]	0 s to 10 s	
	external	EXTernal[1]: R&S®NRX/NRP2 or R&S®NRP-Z5	
		EXTernal2: coaxial trigger I/O	
	slope (external, internal)	pos./neg.	
	delay	−5 s to +10 s	
	hold-off	0 s to 10 s	
	resolution (delay, hold-off, dropout)	0.5 µs (sample period)	
	source	INTernal, EXTernal[1], EXTernal2, IMMediate, BUS, HOLD	
Zero offset	initial, without zeroing		( ): typical at 1 GHz +15 °C to +35 °C
	path 1	< 100 (20) nW	
	path 2	< 4.2 (0.9) µW	
	path 3	< 430 (80) µW	
	after external zeroing [5]		
	path 1	< 21 (12) nW	
	path 2	< 880 (500) nW	
	path 3	< 90 (44) µW	
Zero drift [6]	path 1	< 5.1 (0.8) nW	
	path 2	< 210 (35) nW	
	path 3	< 22 (3) µW	
Measurement noise [7]	path 1	< 15 (8) nW	
	path 2	< 620 (350) nW	
	path 3	< 64 (31) µW	

Uncertainty for absolute power measurements [8] in dB

10 MHz to < 100 MHz

0.268	*0.242*	*0.264*	*0.303*
0.129	*0.135*	*0.171*	*0.227*
0.083	*0.101*	*0.146*	*0.209*

−45 +35 +40 +43 +45

Power level in dBm

100 MHz to 2.4 GHz

0.224	*0.227*	*0.247*	*0.282*	0 °C to +50 °C
0.122	*0.133*	*0.165*	*0.214*	+15 °C to +35 °C
0.087	*0.102*	*0.141*	*0.196*	+20 °C to +25 °C

−45 +35 +40 +43 +45

Power level in dBm

> 2.4 GHz to 12.4 GHz

0.233	*0.239*	*0.258*	*0.292*
0.145	*0.155*	*0.183*	*0.228*
0.108	*0.121*	*0.155*	*0.207*

−45 +35 +40 +43 +45

Power level in dBm

> 12.4 GHz to 18 GHz

0.250	*0.255*	*0.273*	*0.305*	0 °C to +50 °C
0.169	*0.177*	*0.202*	*0.244*	+15 °C to +35 °C
0.131	*0.141*	*0.171*	*0.219*	+20 °C to +25 °C

−45 +35 +40 +43 +45

Power level in dBm

Uncertainty for relative power measurements [9, 10] in dB

10 MHz to < 100 MHz

+43	*0.356*	*0.316*	*0.028*
	0.162	*0.147*	*0.026*
+31	*0.076*	*0.069*	*0.026*
+25	*0.347*	*0.032*	*0.316*
	0.157	*0.025*	*0.147*
+11	*0.073*	*0.024*	*0.069*
+5	*0.022*	*0.347*	*0.356*
	0.022	*0.157*	*0.162*
−45	*0.022*	*0.073*	*0.076*

−45 +5 +11 +25 +31 +43

Power level in dBm

100 MHz to < 2.4 GHz

+43	*0.273*	*0.278*	*0.028*	0 °C to +50 °C
	0.136	*0.138*	*0.026*	+15 °C to +35 °C
+31	*0.068*	*0.067*	*0.026*	+20 °C to +25 °C
+25	*0.266*	*0.032*	*0.278*	0 °C to +50 °C
	0.133	*0.025*	*0.138*	+15 °C to +35 °C
+11	*0.066*	*0.024*	*0.067*	+20 °C to +25 °C
+5	*0.022*	*0.266*	*0.273*	0 °C to +50 °C
	0.022	*0.133*	*0.136*	+15 °C to +35 °C
−45	*0.022*	*0.066*	*0.068*	+20 °C to +25 °C

−45 +5 +11 +25 +31 +43

Power level in dBm

> 2.4 GHz to 12.4 GHz

+43	*0.269*	*0.274*	*0.030*
	0.139	*0.140*	*0.028*
+31	*0.076*	*0.072*	*0.027*
+25	*0.262*	*0.033*	*0.274*
	0.136	*0.026*	*0.140*
+11	*0.073*	*0.024*	*0.072*
+5	*0.022*	*0.262*	*0.269*
	0.022	*0.136*	*0.139*
−45	*0.022*	*0.073*	*0.076*

−45 +5 +11 +25 +31 +43

> 12.4 GHz to 18 GHz

+43	*0.275*	*0.280*	*0.034*	0 °C to +50 °C
	0.148	*0.150*	*0.033*	+15 °C to +35 °C
+31	*0.087*	*0.085*	*0.033*	+20 °C to +25 °C
+25	*0.266*	*0.035*	*0.280*	0 °C to +50 °C
	0.142	*0.028*	*0.150*	+15 °C to +35 °C
+11	*0.080*	*0.026*	*0.085*	+20 °C to +25 °C
+5	*0.022*	*0.266*	*0.275*	0 °C to +50 °C
	0.022	*0.142*	*0.148*	+15 °C to +35 °C
−45	*0.022*	*0.080*	*0.087*	+20 °C to +25 °C

−45 +5 +11 +25 +31 +43

Additional characteristics of the R&S®NRPxxS(N)/18S-10/18S-20/18S-25 three-path diode power sensors and the R&S®NRP33SN-V/67SN-V TVAC-compliant three-path diode power sensors

Sensor type	R&S®NRPxxS(N)	three-path diode power sensor
	R&S®NRP18S-10/-20/-25	three-path diode power sensor with preceding RF power attenuator
	R&S®NRP33SN-V R&S®NRP67SN-V	three-path diode power sensor for use in thermal vacuum
Measurand		power of incident wave
		power of source (DUT) into 50 Ω [11]
RF connector	R&S®NRP8S(N)/NRP18S(N) R&S®NRP18S-10/-20/-25	N (male)
	R&S®NRP33S(N) R&S®NRP33SN-V	3.5 mm (male)
	R&S®NRP40S(N)	2.92 mm (male)
	R&S®NRP50S(N)	2.4 mm (male)
	R&S®NRP67S(N) R&S®NRP67SN-V	1.85 mm (male)
	R&S®NRP90S (1424.6421.02); R&S®NRP90SN (1424.6450.02)	1.35 mm (male)
	R&S®NRP90S (1424.6421.03)	1.00 mm (male)
RF attenuation [12]	R&S®NRPxxS(N) R&S®NRP33SN-V R&S®NRP67SN-V	not applicable
	R&S®NRP18S-10	10 dB
	R&S®NRP18S-20	20 dB
	R&S®NRP18S-25	25 dB
Measurement functions	stationary and recurring waveforms	continuous average
		burst average
		timeslot/gate average
		trace
	single events	burst average
		timeslot/gate average
		trace
Continuous average function	measurand	mean power over recurring acquisition interval
	aperture	10 µs to 2.0 s (20 ms default)
	window function	uniform or von Hann [13]
	duty cycle correction [14]	0.001 % to 100.0 %
	capacity of measurement buffer [15]	1 to 8192 results
Burst average function	measurand	mean power over burst portion of recurring signal (trigger settings required)
	detectable burst width [16]	5 µs to 8 s
	minimum gap between bursts	5 µs
	dropout period [17] for burst end detection	1 µs to 300 ms
	exclusion periods [18]	
	start	0 s to 1 s
	end	0 s to 1 s
	resolution (dropout and exclusion periods)	0.5 µs (sample period)
Timeslot/gate average function	measurand	mean power over individual timeslots/gates
	number of timeslots/gates	1 to 32 (consecutive)
	nominal length	10 µs to 0.1 s
	start of first timeslot/gate	at delayed trigger event
	exclusion periods	
	start	0 s to 1 s
	end	0 s to 1 s
	resolution (nominal length and exclusion periods)	0.5 µs (sample period)

Trace function	measurand	mean, random, maximum and minimum power over pixel length
	acquisition	
	length	10 µs to 3.0 s
	start (referenced to delayed trigger)	–3.0 s to 3.0 s
	result	
	pixel	1 to 100 000
	resolution	≥ 0.5 µs (sample period)
Averaging filter	modes	auto off (fixed averaging number)
		auto on (continuously auto-adapted)
		auto once (automatically fixed once)
	auto off	
	supported measurement functions	all
	averaging number	1, 2, 4, 6, 8, 10 to 65536 (1 or all even numbers between 2 and 65536)
	auto on/once	
	supported measurement functions	continuous average, burst average, timeslot/gate average
	normal operating mode	averaging number adapted to resolution setting and power to be measured
	fixed noise operating mode	averaging number adapted to specified noise content
	result output	
	moving mode	continuous result output, independent of averaging number
	repeat mode	only final result
Attenuation correction	function	corrects the measurement result by means of a fixed factor (dB offset)
	range	–200.000 dB to +200.000 dB
Embedding [19]	function	incorporates a two-port device at the sensor input so that the measurement plane is shifted to the input of this device
	parameters	S_{11}, S_{21}, S_{12} and S_{22} of device
	number of devices	0 to 999
	total number of frequencies	≤ 80000
Gamma correction	function	removes the influence of impedance mismatch from the measurement result so that the measurand corresponds to the power of the source (DUT) into 50 Ω
	parameters	magnitude and phase of reflection coefficient of source (DUT)
Frequency response correction	function	takes the frequency response of the sensor section and of the RF power attenuator into account (if applicable)
	parameter	center frequency of test signal
	residual uncertainty	see specification of calibration uncertainty and uncertainty for absolute and relative power measurements
Measurement times [20] Av: averaging number	continuous average	
	single measurements	2 × (aperture + 100 µs) × Av + t_z
	buffered measurements without averaging	2 × (aperture + 116 µs) × buffer size + t_z t_z = 2 ms (typ.)
Zeroing (duration)		5.3 s
Measurement error due to modulation [21]	general	depends on CCDF and RF bandwidth of test signal
	WCDMA (3GPP test model 1 to 64)	
	worst case	–0.02 dB to +0.05 dB
	typical	–0.01 dB to +0.03 dB
	E-UTRA test model 1.1 (E-TM1.1), 20 MHz	
	worst case	–0.03 dB to +0.08 dB
	typical	–0.02 dB to +0.05 dB

Change of input reflection coefficient with respect to power [22]	R&S®NRP8S(N)/18S(N)/33S(N)/33SN-V/18S-10/18S-20/18S-25			
		+15 °C to +35 °C	0 °C to +50 °C	
	10 MHz to 2.4 GHz; > 2.4 GHz	< 0.01; < 0.02	< 0.02; < 0.03	
	R&S®NRP40S(N)/50S(N) /67S(N)/67SN-V/90S(N)			
		levels ≤ 10 dBm	levels > 10 dBm	
	50 MHz to 8.0 GHz	< 0.006 (meas.)	< 0.015 (meas.)	
	> 8.0 GHz to 18.0 GHz	< 0.014 (meas.)	< 0.027 (meas.)	
	> 18.0 GHz to 26.5 GHz	< 0.019 (meas.)	< 0.039 (meas.)	
	> 26.5 GHz to 33.0 GHz	< 0.023 (meas.)	< 0.048 (meas.)	
	> 33.0 GHz to 40.0 GHz	< 0.027 (meas.)	< 0.057 (meas.)	
	> 40.0 GHz to 50.0 GHz	< 0.029 (meas.)	< 0.068 (meas.)	
	> 50.0 GHz to 67.0 GHz	< 0.035 (meas.)	< 0.080 (meas.)	
	> 67.0 GHz to 90.0 GHz	< 0.040 (meas.)	< 0.090 (meas.)	
Calibration uncertainty [23]	R&S®NRP8S(N)/18S(N)/33S(N) R&S®NRP33SN-V	path 1	path 2	path 3
	10 MHz to < 100 MHz	*0.058 dB*	*0.052 dB*	*0.053 dB*
	100 MHz to 2.4 GHz	*0.060 dB*	*0.058 dB*	*0.058 dB*
	> 2.4 GHz to 8.0 GHz	*0.065 dB*	*0.062 dB*	*0.063 dB*
	> 8.0 GHz to 12.4 GHz	*0.075 dB*	*0.071 dB*	*0.072 dB*
	> 12.4 GHz to 18.0 GHz	*0.092 dB*	*0.088 dB*	*0.089 dB*
	> 18.0 GHz to 26.5 GHz	*0.093 dB*	*0.089 dB*	*0.090 dB*
	> 26.5 GHz to 33.0 GHz	*0.113 dB*	*0.108 dB*	*0.109 dB*
	R&S®NRP40S(N)/50S(N)/67S(N) R&S®NRP67SN-V/90S(N)	path 1	path 2	path 3
	50 MHz to < 200 MHz	*0.076 dB*	*0.070 dB*	*0.071 dB*
	200 MHz to 8.0 GHz	*0.080 dB*	*0.071 dB*	*0.072 dB*
	> 8.0 GHz to 12.4 GHz	*0.089 dB*	*0.079 dB*	*0.080 dB*
	> 12.4 GHz to 18.0 GHz	*0.104 dB*	*0.093 dB*	*0.094 dB*
	> 18.0 GHz to 26.5 GHz	*0.107 dB*	*0.092 dB*	*0.093 dB*
	> 26.5 GHz to 33.0 GHz	*0.123 dB*	*0.107 dB*	*0.108 dB*
	> 33.0 GHz to 40.0 GHz	*0.133 dB*	*0.115 dB*	*0.117 dB*
	> 40.0 GHz to 50.0 GHz	*0.168 dB*	*0.150 dB*	*0.152 dB*
	> 50.0 GHz to 67.0 GHz	*0.220 dB*	*0.199 dB*	*0.202 dB*
	> 50.0 GHz to 90.0 GHz	*0.249 dB*	*0.242 dB*	*0.245 dB*
	R&S®NRP18S-10/-20/-25 [24]	path 1	path 2	path 3
	10 MHz to < 100 MHz	*0.083 dB*	*0.078 dB*	*0.079 dB*
	100 MHz to 2.4 GHz	*0.084 dB*	*0.083 dB*	*0.083 dB*
	> 2.4 GHz to 8.0 GHz	*0.088 dB*	*0.086 dB*	*0.087 dB*
	> 8.0 GHz to 12.4 GHz	*0.096 dB*	*0.093 dB*	*0.094 dB*
	> 12.4 GHz to 18.0 GHz	*0.111 dB*	*0.108 dB*	*0.109 dB*
Host interface	mechanical	8-pin male M12 connector (A-coded)		
	power supply	+5 V/0.5 A (USB high-power device)		
	speed	supports high-speed and full-speed modes according to the specification		
	remote control protocols	supports USB test and measurement device class (USBTMC) and legacy mode for compatibility with R&S®NRP-Zxx power sensors		
	trigger input EXTernal[1]	differential (0 V/+3.3 V)		
	reference clock			
	signal level	LVDS		
	frequency	20 MHz		
	permissible total cable length	≤ 5 m		
Ethernet interface only for R&S®NRPxxSN types and the R&S®NRP33SN-V/67SN-V	mechanical	RJ-45 jack		
	power supply	power over Ethernet (PoE) class 1 device		
	speed	10/100/1000 Mbit/s		
	remote control protocols	VXI11, HiSLIP (high-speed LAN instrument protocol), SCPI-RAW (port 5025)		
	permissible cable length	≤ 100 m		
Trigger-I/O EXTernal2	mechanical	SMB built-in jack		
	impedance			
	input	10 kΩ (nom.) or 50 Ω (nom.) selectable		
	output	50 Ω (nom.)		
	signal level			
	input	compatible with 3 V or 5 V logic, max. –1 to +6 V		
	output	≥ 2 V into 50 Ω load, max. 5.3 V		

Vacuum-specific characteristics of the R&S®NRP33SN-V/67SN-V	recommended bake-out procedure	vacuum bake for 100 h at +85 °C and P < 10^{-5} mbar
	typical mass loss during bake-out	85 mg
Mounting of R&S®NRPxxSN-V onto a baseplate for technical drawings see Appendix	general data	Two threaded through-holes are provided for mounting the sensor to a baseplate. Using a low-outgassing thermal interface material such as graphite foil is highly recommended.
	distance between mounting holes	2" (50.8 mm)
	thread standard	UNC 8-32
	thread length	¼ " (6.35 mm)
Dimensions (W × H × L)	R&S®NRPxxS	48 mm × 30 mm × 138 mm (1.89 in × 1.18 in × 5.43 in)
	R&S®NRPxxSN, R&S®NRP33SN-V/67SN-V	73 mm × 26 mm × 146 mm (2.87 in × 1.02 in × 5.75 in)
	R&S®NRP18S-10	48 mm × 30 mm × 184 mm (1.89 in × 1.18 in × 7.25 in)
	R&S®NRP18S-20	53 mm × 46 mm × 252 mm (2.09 in × 1.82 in × 9.93 in)
	R&S®NRP18S-25	53 mm × 46 mm × 310 mm (2.09 in × 1.82 in × 12.21 in)
Weight	R&S®NRPxxS	< 0.20 kg (0.44 lb)
	R&S®NRPxxSN, R&S®NRP33SN-V/67SN-V	< 0.35 kg (0.77 lb)
	R&S®NRP18S-10	< 0.27 kg (0.59 lb)
	R&S®NRP18S-20	< 0.37 kg (0.81 lb)
	R&S®NRP18S-25	< 0.47 kg (1.02 lb)

Power rating of the R&S®NRP18S-10/-20/-25

Hatched area: The maximum surface temperatures permitted by IEC 1010-1 are exceeded. Provide protection against inadvertent contacting or apply only a short-term load to the power sensor.

R&S®NRP18S-10

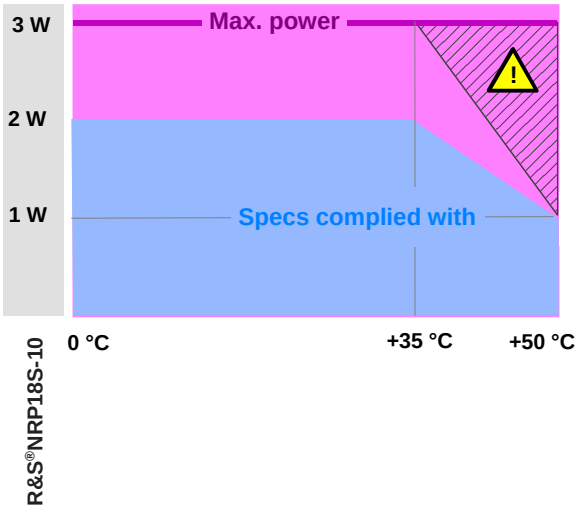

R&S®NRP18S-20/-25

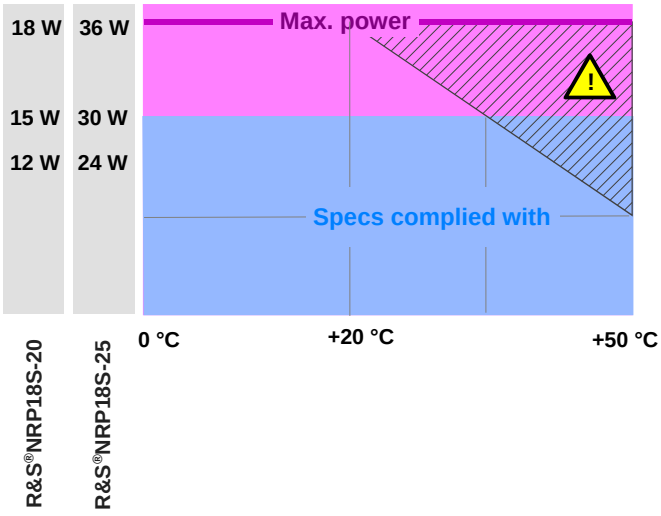

Average power sensors

R&S®NRP6A(N)/18A(N) average power sensors

Specifications from 8 kHz to 6 GHz apply to the R&S®NRP6A(N).
Specifications from 8 kHz to 18 GHz apply to the R&S®NRP18A(N).

Frequency range	R&S®NRP6A(N)	8 kHz to 6 GHz	
	R&S®NRP18A(N)	8 kHz to 18 GHz	
Impedance matching (SWR)	8 kHz to < 20 kHz	< 1.25 (1.23)	( ): +15 °C to +35 °C
	20 kHz to 2.4 GHz	< 1.13 (1.11)	
	> 2.4 GHz to 8.0 GHz	< 1.20 (1.18)	
	> 8.0 GHz to 18.0 GHz	< 1.25 (1.23)	
Power measurement range		100 pW to 200 mW (–70 dBm to +23 dBm)	
Maximum power	average power	1 W (+30 dBm) AVG, max. 10 V DC	
	peak envelope power	2 W (+33 dBm) for max. 10 µs	
Measurement subranges	path 1	–70 dBm to –15 dBm	
	path 2	–53 dBm to +5 dBm	
	path 3	–33 dBm to +23 dBm	
Transition regions	with automatic path selection [3]	(–20 ± 1) dBm to (–14 ± 1) dBm (0 ± 1) dBm to (+6 ± 1) dBm	
Dynamic response	rise time 10 %/90 %	< 5 ms	
Acquisition	sample rate (continuous)	2 Msps	
	accuracy of time base	±5 ppm	
Zero offset	initial, without zeroing		( ): typical at 1 GHz +15 °C to +35 °C
	path 1	< 235 (50) pW	
	path 2	< 10.3 (2.2) nW	
	path 3	< 0.93 (0.19) µW	
	after external zeroing [5]		
	path 1	< 49 (28) pW	
	path 2	< 2.1 (1.3) nW	
	path 3	< 192 (108) nW	
Zero drift [6]	path 1	< 12 (2) pW	
	path 2	< 0.5 (0.1) nW	
	path 3	< 47 (8) nW	
Measurement noise [7]	path 1	< 35 (20) pW	
	path 2	< 1.5 (0.9) nW	
	path 3	< 136 (76) nW	

Uncertainty for absolute power measurements [8] in dB

8 kHz to < 20 kHz

0.238	*0.229*	*0.223*
0.093	*0.093*	*0.089*
0.052	*0.052*	*0.051*

–70 –20 0 +23

Power level in dBm

20 kHz to < 100 MHz

0.166	*0.171*	*0.166*
0.080	*0.082*	*0.081*
0.054	*0.053*	*0.054*

–70 –20 0 +23

Power level in dBm

0 °C to +50 °C
+15 °C to +35 °C
+20 °C to +25 °C

100 MHz to 2.4 GHz

0.161	*0.168*	*0.163*
0.081	*0.083*	*0.082*
0.054	*0.054*	*0.054*

–70 –20 0 +23

Power level in dBm

> 2.4 GHz to 8 GHz

0.158	*0.165*	*0.160*
0.082	*0.083*	*0.081*
0.056	*0.055*	*0.055*

–70 –20 0 +23

Power level in dBm

0 °C to +50 °C
+15 °C to +35 °C
+20 °C to +25 °C

> 8 GHz to 12.4 GHz

0.166	*0.172*	*0.166*
0.096	*0.096*	*0.095*
0.076	*0.073*	*0.074*

–70 –20 0 +23

Power level in dBm

> 12.4 GHz to 18 GHz

0.174	*0.182*	*0.178*
0.110	*0.111*	*0.112*
0.092	*0.090*	*0.094*

–70 –20 0 +23

Power level in dBm

0 °C to +50 °C
+15 °C to +35 °C
+20 °C to +25 °C

Uncertainty for relative power measurements [9] in dB

8 kHz to < 20 kHz

Power level in dBm	–70	–20	–14	0	+6	+23
+23	0.299	0.292		0.027		
	0.107	0.105		0.026		
+6	0.046	0.041		0.026		
0	0.293	0.029		0.292		
	0.104	0.024		0.105		
–14	0.044	0.023		0.041		
–20	0.022	0.293		0.299		
	0.022	0.104		0.107		
–70	0.022	0.044		0.046		

20 kHz to < 100 MHz

Power level in dBm	–70	–20	–14	0	+6	+23	
+23	0.220	0.222		0.027			0 °C to +50 °C
	0.094	0.093		0.026			+15 °C to +35 °C
+6	0.044	0.040		0.026			+20 °C to +25 °C
0	0.214	0.028		0.222			0 °C to +50 °C
	0.091	0.024		0.093			+15 °C to +35 °C
–14	0.042	0.023		0.040			+20 °C to +25 °C
–20	0.022	0.214		0.220			0 °C to +50 °C
	0.022	0.091		0.094			+15 °C to +35 °C
–70	0.022	0.042		0.044			+20 °C to +25 °C

100 MHz to 2.4 GHz

Power level in dBm	–70	–20	–14	0	+6	+23
+23	0.213	0.217		0.027		
	0.093	0.093		0.026		
+6	0.045	0.040		0.026		
0	0.208	0.028		0.217		
	0.090	0.024		0.093		
–14	0.043	0.023		0.040		
–20	0.022	0.208		0.213		
	0.022	0.090		0.093		
–70	0.022	0.043		0.045		

> 2.4 GHz to 8 GHz

Power level in dBm	–70	–20	–14	0	+6	+23	
+23	0.211	0.214		0.027			0 °C to +50 °C
	0.095	0.093		0.026			+15 °C to +35 °C
+6	0.050	0.042		0.026			+20 °C to +25 °C
0	0.205	0.028		0.214			0 °C to +50 °C
	0.092	0.024		0.093			+15 °C to +35 °C
–14	0.047	0.023		0.042			+20 °C to +25 °C
–20	0.022	0.205		0.211			0 °C to +50 °C
	0.022	0.092		0.095			+15 °C to +35 °C
–70	0.022	0.047		0.050			+20 °C to +25 °C

> 8 GHz to 12.4 GHz

Power level in dBm	–70	–20	–14	0	+6	+23
+23	0.212	0.215		0.029		
	0.099	0.097		0.027		
+6	0.056	0.048		0.027		
0	0.207	0.029		0.215		
	0.095	0.025		0.097		
–14	0.052	0.024		0.048		
–20	0.022	0.207		0.212		
	0.022	0.095		0.099		
–70	0.022	0.052		0.056		

> 12.4 GHz to 18 GHz

Power level in dBm	–70	–20	–14	0	+6	+23	
+23	0.219	0.223		0.034			0 °C to +50 °C
	0.109	0.108		0.033			+15 °C to +35 °C
+6	0.069	0.064		0.032			+20 °C to +25 °C
0	0.212	0.031		0.223			0 °C to +50 °C
	0.102	0.027		0.108			+15 °C to +35 °C
–14	0.061	0.026		0.064			+20 °C to +25 °C
–20	0.022	0.212		0.219			0 °C to +50 °C
	0.022	0.102		0.109			+15 °C to +35 °C
–70	0.022	0.061		0.069			+20 °C to +25 °C

Additional characteristics of the R&S®NRPxxA(N) average power sensors

Sensor type		three-path diode power sensor
Measurand		power of incident wave
		power of source (DUT) into 50 Ω [11]
RF connector		N (male)
Measurement functions	stationary and recurring waveforms	continuous average
Continuous average function	measurand	mean power over recurring acquisition interval
	aperture	10 µs to 2.0 s (20 ms default)
	window function	uniform or von Hann [13]
	duty cycle correction [14]	0.001 % to 100.0 %
	capacity of measurement buffer [15]	1 to 8192 results
Averaging filter	modes	auto off (fixed averaging number)
		auto on (continuously auto-adapted)
		auto once (automatically fixed once)
	auto off	
	supported measurement functions	all
	averaging number	1, 2, 4, 6, 8, 10 to 65536 (1 or all even numbers between 2 and 65536)
	auto on/once	
	normal operating mode	averaging number adapted to resolution setting and power to be measured
	fixed noise operating mode	averaging number adapted to specified noise content
	result output	
	moving mode	continuous result output, independent of averaging number
	repeat mode	only final result
Attenuation correction	function	corrects the measurement result by means of a fixed factor (dB offset)
	range	–200.000 dB to +200.000 dB
Embedding	function	incorporates a two-port device at the sensor input so that the measurement plane is shifted to the input of this device
	parameters	S_{11}, S_{21}, S_{12} and S_{22} of device
	number of devices	0 to 999
	total number of frequencies	≤ 80000
Gamma correction	function	removes the influence of impedance mismatch from the measurement result so that the measurand corresponds to the power of the source (DUT) into 50 Ω
	parameters	magnitude and phase of reflection coefficient of source (DUT)
Frequency response correction	function	takes the frequency response of the sensor section and of the RF power attenuator into account (if applicable)
	parameter	center frequency of test signal
	residual uncertainty	see specification of calibration uncertainty and uncertainty for absolute and relative power measurements
Measurement time [20] Av: averaging number	continuous average	
	single measurements	2 × (aperture + 5 ms) × Av –5 ms + t_z t_z = 2 ms (typ.)
Zeroing (duration)		6.6 s
Measurement error due to modulation [21]	general	depends on CCDF and RF bandwidth of test signal
	WCDMA (3GPP test model 1 to 64)	
	worst case	–0.02 dB to +0.05 dB
	typical	–0.01 dB to +0.03 dB
	E-UTRA test model 1.1 (E-TM1.1), 20 MHz	
	worst case	–0.03 dB to +0.08 dB
	typical	–0.02 dB to +0.05 dB

Change of input reflection coefficient with respect to power [22]	8 kHz to 2.4 GHz	< 0.02 (0.01)	( ): +15 °C to +35 °C	
	> 2.4 GHz	< 0.03 (0.02)		
Calibration uncertainty [23]		path 1	path 2	path 3
	8 kHz to < 20 kHz	*0.052 dB*	*0.050 dB*	*0.050 dB*
	20 kHz to < 100 MHz	*0.055 dB*	*0.052 dB*	*0.053 dB*
	100 MHz to 2.40 GHz	*0.054 dB*	*0.052 dB*	*0.053 dB*
	> 2.4 GHz to 8.0 GHz	*0.056 dB*	*0.053 dB*	*0.053 dB*
	> 8.0 GHz to 12.4 GHz	*0.065 dB*	*0.062 dB*	*0.062 dB*
	> 12.4 GHz to 18.0 GHz	*0.076 dB*	*0.073 dB*	*0.075 dB*
Host interface	mechanical	8-pin male M12 connector (A-coded)		
	power supply	+5 V/0.5 A (USB high-power device)		
	speed	supports high-speed and full-speed modes according to the specification		
	remote control protocols	supports USB test and measurement device class (USBTMC) and legacy mode for compatibility with R&S®NRP-Zxx power sensors		
	trigger input EXTernal[1]	differential (0 V/+3.3 V)		
	reference clock			
	signal level	LVDS		
	frequency	20 MHz		
	permissible total cable length	≤ 5 m		
Ethernet interface only for R&S®NRPxxAN types	mechanical	RJ-45 jack		
	power supply	power over Ethernet (PoE) class 1 device		
	speed	10/100/1000 Mbit/s		
	remote control protocols	VXI11, HiSLIP (high-speed LAN instrument protocol), SCPI-RAW (port 5025)		
	permissible cable length	≤ 100 m		
Trigger-I/O EXTernal2	mechanical	SMB built-in jack		
	impedance			
	input	10 kΩ (nom.) or 50 Ω (nom.) selectable		
	output	50 Ω (nom.)		
	signal level			
	input	compatible with 3 V or 5 V logic, max. –1 to +6 V		
	output	≥ 2 V into 50 Ω load, max. 5.3 V		
Dimensions (W × H × L)	R&S®NRPxxA	48 mm × 30 mm × 138 mm (1.89 in × 1.18 in × 5.43 in)		
	R&S®NRPxxAN	73 mm × 26 mm × 146 mm (2.87 in × 1.02 in × 5.75 in)		
Weight	R&S®NRPxxA	< 0.20 kg (0.44 lb)		
	R&S®NRPxxAN	< 0.35 kg (0.77 lb)		

Thermal power sensors

R&S®NRP18T(N)/33T(N)/40T(N)/50T(N)/67T(N) thermal power sensors

Specifications from DC to 18 GHz apply to the R&S®NRP18T(N).
Specifications from DC to 33 GHz apply to the R&S®NRP33T(N).
Specifications from DC to 40 GHz apply to the R&S®NRP40T(N).
Specifications from DC to 50 GHz apply to the R&S®NRP50T(N).
Specifications from DC to 67 GHz apply to the R&S®NRP67T(N).

Frequency range	R&S®NRP18T(N)	DC to 18 GHz		
	R&S®NRP33T(N)	DC to 33 GHz		
	R&S®NRP40T(N)	DC to 40 GHz		
	R&S®NRP50T(N)	DC to 50 GHz		
	R&S®NRP67T(N)	DC to 67 GHz		
Impedance matching (SWR)	DC to 100 MHz	< 1.03		
	> 100 MHz to 2.4 GHz	< 1.06		
	> 2.4 GHz to 12.4 GHz	< 1.13		
	> 12.4 GHz to 18.0 GHz	< 1.16		
	> 18.0 GHz to 26.5 GHz	< 1.22		
	> 26.5 GHz to 33.0 GHz	< 1.28		
	> 33.0 GHz to 40.0 GHz	< 1.28		
	> 40.0 GHz to 44.0 GHz	< 1.30		
	> 44.0 GHz to 50.0 GHz	< 1.30		
	> 50.0 GHz to 67.0 GHz	< 1.35		
Power measurement range		300 nW to 100 mW (–35 dBm to +20 dBm), continuous, in a single range		
Maximum power	average power	0.3 W (+25 dBm), continuous		
	peak envelope power			
	R&S®NRP18T(N)	20 W (43 dBm) for max. 1 µs		
	R&S®NRP33T(N)/40T(N)/ 50T(N)/67T(N)	10 W (40 dBm) for max. 1 µs		
Acquisition	sample rate	50 ksps (sigma-delta)		
	accuracy of time base	±5 ppm		
Zero offset	after external zeroing [5]	< 25 nW (typ. 15 nW at 1 GHz)		
Zero drift [6]		< 8 nW		
Measurement noise [7]		< 25 nW (typ. 15 nW at 1 GHz)		
Uncertainty for absolute power measurements [25]		+20 °C to +25 °C	+15 °C to +35 °C	0 °C to +50 °C
	DC to 100 MHz	*0.040 dB*	*0.046 dB*	*0.067 dB*
	> 100 MHz to 2.4 GHz	*0.048 dB*	*0.053 dB*	*0.072 dB*
	> 2.4 GHz to 8.0 GHz	*0.054 dB*	*0.059 dB*	*0.079 dB*
	> 8.0 GHz to 12.4 GHz	*0.063 dB*	*0.068 dB*	*0.085 dB*
	> 12.4 GHz to 18.0 GHz	*0.082 dB*	*0.086 dB*	*0.100 dB*
	> 18.0 GHz to 26.5 GHz	*0.086 dB*	*0.086 dB*	*0.102 dB*
	> 26.5 GHz to 33.0 GHz	*0.101 dB*	*0.105 dB*	*0.121 dB*
	> 33.0 GHz to 40.0 GHz	*0.108 dB*	*0.112 dB*	*0.127 dB*
	> 40.0 GHz to 44.0 GHz	*0.138 dB*	*0.141 dB*	*0.155 dB*
	> 44.0 GHz to 50.0 GHz	*0.143 dB*	*0.146 dB*	*0.159 dB*
	> 50.0 GHz to 59.0 GHz	*0.206 dB*	*0.208 dB*	*0.220 dB*
	> 59.0 GHz to 67.0 GHz	*0.209 dB*	*0.212 dB*	*0.223 dB*
Uncertainty for relative power measurements [26]		*0.010 dB*		

R&S®NRP90T(N)/110T thermal power sensors

Specifications from DC to 90 GHz apply to the R&S®NRP90T(N).
Specifications from DC to 110 GHz apply to the R&S®NRP110T.

Frequency range	R&S®NRP90T(N)	DC to 90 GHz (calibrated up to 94 GHz [27])		
Impedance matching (SWR)	DC to 100 MHz	< 1.05		
	> 100 MHz to 2.4 GHz	< 1.08		
	> 2.4 GHz to 12.4 GHz	< 1.18		
	> 12.4 GHz to 18.0 GHz	< 1.23		
	> 18.0 GHz to 26.5 GHz	< 1.28		
	> 26.5 GHz to 40.0 GHz	< 1.38		
	> 40.0 GHz to 50.0 GHz	< 1.46		
	> 50.0 GHz to 67.0 GHz	< 1.56		
	> 67.0 GHz to 80.0 GHz	< 1.60		
	> 80.0 GHz to 95.0 GHz	< 1.66		
	> 95.0 GHz to 110.0 GHz	< 1.70		
Power measurement range		300 nW to 100 mW (–35 dBm to +20 dBm), continuous, in a single range		
Maximum power	average power	0.3 W (+25 dBm), continuous		
	peak envelope power	10 W (40 dBm) for max. 1 µs		
Acquisition	sample rate	50 ksps (sigma-delta)		
	accuracy of time base	±5 ppm		
Zero offset	after external zeroing [5]	< 34 nW (typ. 15 nW at 1 GHz)		
Zero drift [6]		< 11 nW		
Measurement noise [7]		< 34 nW (typ. 15 nW at 1 GHz)		
Uncertainty for absolute power measurements [25, 27]		+20 °C to +25 °C	+15 °C to +35 °C	0 °C to +50 °C
	DC to 100 MHz	*0.041 dB*	*0.047 dB*	*0.068 dB*
	> 100 MHz to 2.4 GHz	*0.051 dB*	*0.057 dB*	*0.074 dB*
	> 2.4 GHz to 12.4 GHz	*0.074 dB*	*0.078 dB*	*0.093 dB*
	> 12.4 GHz to 18.0 GHz	*0.098 dB*	*0.101 dB*	*0.113 dB*
	> 18.0 GHz to 26.5 GHz	*0.099 dB*	*0.103 dB*	*0.115 dB*
	> 26.5 GHz to 40.0 GHz	*0.118 dB*	*0.122 dB*	*0.135 dB*
	> 40.0 GHz to 50.0 GHz	*0.166 dB*	*0.169 dB*	*0.182 dB*
	> 50.0 GHz to 59.0 GHz	*0.226 dB*	*0.229 dB*	*0.244 dB*
	> 59.0 GHz to 67.0 GHz	*0.231 dB*	*0.235 dB*	*0.249 dB*
	> 67.0 GHz to 80.0 GHz	*0.251 dB*	*0.255 dB*	*0.270 dB*
	> 80.0 GHz to 95.0 GHz	*0.269 dB*	*0.273 dB*	*0.289 dB*
	> 95.0 GHz to 110.0 GHz	*0.290 dB*	*0.294 dB*	*0.311 dB*
Uncertainty for relative power measurements [26]	DC to 67.0 GHz	*0.010 dB*		
	> 67.0 GHz to 110.0 GHz	*0.014 dB*		

R&S®NRP125T thermal power sensors

Specifications from DC to 125 GHz apply to the R&S®NRP125T.

Frequency range	R&S®NRP125T	DC to 125 GHz		
Impedance matching (SWR)	DC to 100 MHz	< 1.05		
	> 100 MHz to 2.4 GHz	< 1.10		
	> 2.4 GHz to 12.4 GHz	< 1.16		
	> 12.4 GHz to 18.0 GHz	< 1.18		
	> 18.0 GHz to 26.5 GHz	< 1.22		
	> 26.5 GHz to 40.0 GHz	< 1.28		
	> 40.0 GHz to 50.0 GHz	< 1.30		
	> 50.0 GHz to 67.0 GHz	< 1.35		
	> 67.0 GHz to 80.0 GHz	< 1.46		
	> 80.0 GHz to 95.0 GHz	< 1.57		
	> 95.0 GHz to 110.0 GHz	< 1.66		
	> 110.0 GHz to 125.0 GHz	< 1.70		
Power measurement range		300 nW to 100 mW (–35 dBm to +20 dBm), continuous, in a single range		
Maximum power	average power	0.3 W (+25 dBm), continuous		
	peak envelope power	5 W (37 dBm) for max. 1 µs		
Acquisition	sample rate	50 ksps (sigma-delta)		
	accuracy of time base	±5 ppm		
Zero offset	after external zeroing [5]	< 34 nW (typ. 15 nW at 1 GHz)		
Zero drift [6]		< 11 nW		
Measurement noise [7]		< 34 nW (typ. 15 nW at 1 GHz)		
Uncertainty for absolute power measurements [25, 27]		+20 °C to +25 °C	+15 °C to +35 °C	0 °C to +50 °C
	DC to 100 MHz	*0.041 dB*	*0.047 dB*	*0.068 dB*
	> 100 MHz to 2.4 GHz	*0.051 dB*	*0.057 dB*	*0.074 dB*
	> 2.4 GHz to 12.4 GHz	*0.074 dB*	*0.078 dB*	*0.093 dB*
	> 12.4 GHz to 18.0 GHz	*0.098 dB*	*0.101 dB*	*0.113 dB*
	> 18.0 GHz to 26.5 GHz	*0.099 dB*	*0.103 dB*	*0.115 dB*
	> 26.5 GHz to 40.0 GHz	*0.118 dB*	*0.122 dB*	*0.135 dB*
	> 40.0 GHz to 50.0 GHz	*0.166 dB*	*0.169 dB*	*0.182 dB*
	> 50.0 GHz to 59.0 GHz	*0.226 dB*	*0.229 dB*	*0.244 dB*
	> 59.0 GHz to 67.0 GHz	*0.231 dB*	*0.235 dB*	*0.249 dB*
	> 67.0 GHz to 80.0 GHz	*0.251 dB*	*0.255 dB*	*0.270 dB*
	> 80.0 GHz to 95.0 GHz	*0.269 dB*	*0.273 dB*	*0.289 dB*
	> 95.0 GHz to 110.0 GHz	*0.274 dB*	*0.278 dB*	*0.297 dB*
	> 110.0 GHz to 116.0 GHz	*0.284 dB*	*0.289 dB*	*0.306 dB*
	> 116.0 GHz to 125.0 GHz	*0.325 dB*	*0.329 dB*	*0.344 dB*
Uncertainty for relative power measurements [26]	DC to 67.0 GHz	*0.010 dB*		
	> 67.0 GHz to 110.0 GHz	*0.014 dB*		
	> 110.0 GHz to 125.0 GHz	*0.020 dB*		

Additional characteristics of the R&S®NRP18T(N)/33T(N)/40T(N)/50T(N)/67T(N)/90T(N)/110T/125T thermal power sensors

Sensor type		thermoelectric power sensor
Measurand		power of incident wave
		power of source (DUT) into 50 Ω [11]
RF connector	R&S®NRP18T(N)	N (male)
	R&S®NRP33T(N)	3.50 mm (male)
	R&S®NRP40T(N)	2.92 mm (male)
	R&S®NRP50T(N)	2.40 mm (male)
	R&S®NRP67T(N)	1.85 mm (male)
	R&S®NRP90T(N)	1.35 mm (male)
	R&S®NRP110T/125T	1.00 mm (male)
Measurement function	stationary and recurring waveforms	continuous average
Continuous average function	measurand	mean power over recurring acquisition interval
	aperture	0.5 ms to 300 ms (5 ms default)
	window function	uniform or von Hann [13]
	duty cycle correction [14]	0.001 % to 100.0 %
	capacity of measurement buffer [15]	1 to 8192 results
Averaging filter	modes	auto off (fixed averaging number)
		auto on (continuously auto-adapted)
		auto once (automatically fixed once)
	auto off	
	averaging number	1, 2, 4, 6, 8, 10 to 65536 (1 or all even numbers between 2 and 65536)
	auto on/once	
	normal operating mode	averaging number adapted to resolution setting and power to be measured
	fixed noise operating mode	averaging number adapted to specified noise content
	result output	
	moving mode	continuous result output, independent of averaging number
	repeat mode	only final result
Attenuation correction	function	corrects the measurement result by means of a fixed factor (dB offset)
	range	–200.000 dB to +200.000 dB
Embedding	function	incorporates a two-port device at the sensor input so that the measurement plane is shifted to the input of this device
	parameters	S_{11}, S_{21}, S_{12} and S_{22} of device
	frequencies	0 to 999
Gamma correction	function	removes the influence of impedance mismatch from the measurement result so that the power of the source (DUT) into 50 Ω can be read
	parameters	magnitude and phase of reflection coefficient of source (DUT)
Frequency response correction	function	takes the frequency response of the power sensor into account
	parameter	center frequency of test signal
	residual uncertainty	see specification of calibration uncertainty and uncertainty for absolute and relative power measurements
Measurement time [20] Av: averaging number	continuous average single measurements	2 × (aperture + 300 µs) × Av + t_z + t_d t_z : = 4 ms (typ.) t_d must be taken into account when auto delay is active
	delay time t_d	
	R&S®NRP18T(N)	80 ms
	R&S®NRP33T(N)/40T(N)/50T(N)/67T(N)/90T(N)/110T/125T	40 ms
Zeroing (duration)		10 s
Change of input reflection coefficient with respect to power [22]	only for power levels > 15 dBm	< 0.005

Calibration uncertainty [28]	R&S®NRP18T(N)/33T(N)/40T(N)/50T(N)/67T(N)	
	DC to 100 MHz	*0.040 dB*
	> 100 MHz to 2.4 GHz	*0.047 dB*
	> 2.4 GHz to 8.0 GHz	*0.054 dB*
	> 8.0 GHz to 12.4 GHz	*0.063 dB*
	> 12.4 GHz to 18.0 GHz	*0.082 dB*
	> 18.0 GHz to 26.5 GHz	*0.085 dB*
	> 26.5 GHz to 33.0 GHz	*0.101 dB*
	> 33.0 GHz to 40.0 GHz	*0.108 dB*
	> 40.0 GHz to 44.0 GHz	*0.138 dB*
	> 44.0 GHz to 50.0 GHz	*0.143 dB*
	> 50.0 GHz to 59.0 GHz	*0.190 dB*
	> 59.0 GHz to 67.0 GHz	*0.193 dB*
	R&S®NRP90T(N)/110T	
	DC to 100 MHz	*0.041 dB*
	> 100 MHz to 2.4 GHz	*0.051 dB*
	> 2.4 GHz to 12.4 GHz	*0.074 dB*
	> 12.4 GHz to 18.0 GHz	*0.098 dB*
	> 18.0 GHz to 26.5 GHz	*0.099 dB*
	> 26.5 GHz to 40.0 GHz	*0.118 dB*
	> 40.0 GHz to 50.0 GHz	*0.166 dB*
	> 50.0 GHz to 59.0 GHz	*0.211 dB*
	> 59.0 GHz to 67.0 GHz	*0.217 dB*
	> 67.0 GHz to 80.0 GHz	*0.220 dB*
	> 80.0 GHz to 95.0 GHz	*0.240 dB*
	> 95.0 GHz to 110.0 GHz	*0.263 dB*
	R&S®NRP125T	
	DC to 100 MHz	*0.041 dB*
	> 100 MHz to 2.4 GHz	*0.051 dB*
	> 2.4 GHz to 12.4 GHz	*0.074 dB*
	> 12.4 GHz to 18.0 GHz	*0.098 dB*
	> 18.0 GHz to 26.5 GHz	*0.099 dB*
	> 26.5 GHz to 40.0 GHz	*0.118 dB*
	> 40.0 GHz to 50.0 GHz	*0.166 dB*
	> 50.0 GHz to 59.0 GHz	*0.211 dB*
	> 59.0 GHz to 67.0 GHz	*0.217 dB*
	> 67.0 GHz to 80.0 GHz	*0.220 dB*
	> 80.0 GHz to 95.0 GHz	*0.240 dB*
	> 95.0 GHz to 110 GHz	*0.246 dB*
	> 110 GHz to 116 GHz	*0.258 dB*
	> 116 GHz to 125 GHz	*0.301 dB*

Linearity [29]	DC to 67.0 GHz	*0.007 dB*
	> 67.0 GHz to 110.0 GHz	*0.010 dB*
	> 110.0 GHz to 125.0 GHz	*0.014 dB*
Temperature effect [30]	DC to 100 MHz	< 0.002 dB/K
	> 100 MHz to 50.0 GHz	< 0.003 dB/K
	> 50.0 GHz to 125.0 GHz	< 0.004 dB/K
Host interface	mechanical	8-pin male M12 connector (A-coded)
	power supply	+5 V/0.5 A (USB high-power device)
	speed	supports high-speed and full-speed modes according to the specification
	remote control protocols	supports USB test and measurement device class (USBTMC) and legacy mode for compatibility with R&S®NRP-Zxx power sensors
	trigger input EXTernal[1]	differential (0 V/+3.3 V)
	reference clock	
	signal level	LVDS
	frequency	20 MHz
	permissible total cable length	≤ 5 m
Ethernet interface only for R&S®NRPxxTN types	mechanical	RJ-45 jack
	power supply	power over Ethernet (PoE) class 1 device
	speed	10/100/1000 Mbit/s
	remote control protocols	VXI11, HiSLIP (high-speed LAN instrument protocol), SCPI-RAW (port 5025)
	permissible cable length	≤ 100 m
Trigger-I/O EXTernal2	mechanical	SMB built-in jack
	impedance	
	input	10 kΩ (nom.) or 50 Ω (nom.) selectable
	output	50 Ω (nom.)
	signal level	
	input	compatible with 3 V or 5 V logic, max. –1 V to +6 V
	output	≥ 2 V into 50 Ω load, max. 5.3 V
Dimensions (W × H × L)	R&S®NRPxxT	48 mm × 30 mm × 138 mm (1.89 in × 1.18 in × 5.43 in)
	R&S®NRPxxTN	73 mm × 26 mm × 146 mm (2.87 in × 1.02 in × 5.75 in)
Weight	R&S®NRPxxT	< 0.20 kg (0.44 lb)
	R&S®NRPxxTN	< 0.35 kg (0.77 lb)

Thermal waveguide power sensors

R&S®NRP75TWG(N)/90TWG(N)/110TWG(N)/140TWG(N)/170TWG(N) thermal waveguide power sensors

Specifications from 50 GHz to 75 GHz apply to the R&S®NRP75TWG(N).
Specifications from 60 GHz to 90 GHz apply to the R&S®NRP90TWG(N).
Specifications from 75 GHz to 110 GHz apply to the R&S®NRP110TWG(N).
Specifications from 90 GHz to 140 GHz apply to the R&S®NRP140TWG(N).
Specifications from 110 GHz to 170 GHz apply to the R&S®NRP170TWG(N).

Frequency range	R&S®NRP75TWG(N)	50 GHz to 75 GHz		
	R&S®NRP90TWG(N)	60 GHz to 90 GHz		
	R&S®NRP110TWG(N)	75 GHz to 110 GHz		
	R&S®NRP140TWG(N)	90 GHz to 140 GHz		
	R&S®NRP170TWG(N)	110 GHz to 170 GHz		
Impedance matching (SWR)		< 1.35		
Power measurement range		300 nW to 100 mW (–35 dBm to +20 dBm), continuous, in a single range		
Maximum power	average power	0.3 W (+25 dBm), continuous		
	peak envelope power			
	R&S®NRP75TWG(N) R&S®NRP90TWG(N) R&S®NRP110TWG(N)	10 W (40 dBm) for max. 1 µs		
	R&S®NRP140TWG(N) R&S®NRP170TWG(N)	5 W (37 dBm) for max. 1 µs		
Acquisition	sample rate	50 ksps (sigma-delta)		
	accuracy of time base	±5 ppm		
Zero offset	after external zeroing [5]			
	R&S®NRP75TWG(N) R&S®NRP90TWG(N) R&S®NRP110TWG(N)	< 28 nW (typ. 20 nW)		
	R&S®NRP140TWG(N) R&S®NRP170TWG(N)	< 34 nW (typ. 24 nW)		
Zero drift [6]	R&S®NRP75TWG(N) R&S®NRP90TWG(N) R&S®NRP110TWG(N)	< 10 nW		
	R&S®NRP140TWG(N) R&S®NRP170TWG(N)	< 11 nW		
Measurement noise [7]	R&S®NRP75TWG(N) R&S®NRP90TWG(N) R&S®NRP110TWG(N)	< 28 nW (typ. 20 nW)		
	R&S®NRP140TWG(N) R&S®NRP170TWG(N)	< 34 nW (typ. 24 nW)		
Uncertainty for absolute power measurements [25]		+20 °C to +25 °C	+15 °C to +35 °C	0 °C to +50 °C
	R&S®NRP75TWG(N)			
	50 GHz to 75 GHz	*0.190 dB*	*0.193 dB*	*0.204 dB*
	R&S®NRP90TWG(N)			
	60 GHz to 90 GHz	*0.194 dB*	*0.197 dB*	*0.208 dB*
	R&S®NRP110TWG(N)			
	75 GHz to 110 GHz	*0.198 dB*	*0.201 dB*	*0.212 dB*
	R&S®NRP140TWG(N)			
	90 GHz to 110 GHz	*0.200 dB*	*0.203 dB*	*0.214 dB*
	>110 GHz to 140 GHz	*0.238 dB*	*0.240 dB*	*0.251 dB*
	R&S®NRP170TWG(N)			
	110 GHz to 140 GHz	*0.236 dB*	*0.238 dB*	*0.249 dB*
	>140 GHz to 170 GHz	*0.260 dB*	*0.262 dB*	*0.272 dB*
Uncertainty for relative power measurements [26]	50 GHz to 110 GHz	*0.014 dB*		
	>110 GHz to 170 GHz	*0.020 dB*		

Additional characteristics of the R&S®NRP75TWG(N)/90TWG(N)/110TWG(N)/140TWG(N)/170TWG(N) thermal waveguide power sensors

Sensor type		thermoelectric power sensor
Measurand		power of incident wave
		power of source (DUT) into matched waveguide [11]
RF connector	R&S®NRP75TWG(N)	WR15
	R&S®NRP90TWG(N)	WR12
	R&S®NRP110TWG(N)	WM-2540 (WR10)
	R&S®NRP140TWG(N)	WM-2032 (WR8)
	R&S®NRP170TWG(N)	WM-1651 (WR6.5)
Measurement function	stationary and recurring waveforms	continuous average
Continuous average function	measurand	mean power over recurring acquisition interval
	aperture	0.5 ms to 300 ms (5 ms default)
	window function	uniform or von Hann [13]
	duty cycle correction [14]	0.001 % to 100.0 %
	capacity of measurement buffer [15]	1 to 8192 results
Averaging filter	modes	auto off (fixed averaging number)
		auto on (continuously auto-adapted)
		auto once (automatically fixed once)
	auto off	
	averaging number	1, 2, 4, 6, 8, 10 to 65536 (1 or all even numbers between 2 and 65536)
	auto on/once	
	normal operating mode	averaging number adapted to resolution setting and power to be measured
	fixed noise operating mode	averaging number adapted to specified noise content
	result output	
	moving mode	continuous result output, independent of averaging number
	repeat mode	only final result
Attenuation correction	function	corrects the measurement result by means of a fixed factor (dB offset)
	range	–200.000 dB to +200.000 dB
Embedding	function	incorporates a two-port device at the sensor input so that the measurement plane is shifted to the input of this device
	parameters	S_{11}, S_{21}, S_{12} and S_{22} of device
	frequencies	0 to 999
Gamma correction	function	removes the influence of impedance mismatch from the measurement result so that the power of the source (DUT) into 50 Ω can be read
	parameters	magnitude and phase of reflection coefficient of source (DUT)
Frequency response correction	function	takes the frequency response of the power sensor into account
	parameter	center frequency of test signal
	residual uncertainty	see specification of calibration uncertainty and uncertainty for absolute and relative power measurements
Measurement time [20] Av: averaging number	continuous average single measurements	2 × (aperture + 300 µs) × Av + t_z + t_d t_z : = 4 ms (typ.) t_d must be taken into account when auto delay is active
	delay time t_d	150 ms
Zeroing (duration)		10 s
Change of input reflection co-efficient with respect to power [22]	only for power levels > 15 dBm	< 0.005

Calibration uncertainty [28]	R&S®NRP75TWG(N)	
	50 GHz to 75 GHz	*0.180 dB*
	R&S®NRP90TWG(N)	
	60 GHz to 90 GHz	*0.184 dB*
	R&S®NRP110TWG(N)	
	75 GHz to 110 GHz	*0.188 dB*
	R&S®NRP140TWG(N)	
	90 GHz to 110 GHz	*0.190 dB*
	>110 GHz to 140 GHz	*0.232 dB*
	R&S®NRP170TWG(N)	
	110 GHz to 140 GHz	*0.230 dB*
	>140 GHz to 170 GHz	*0.253 dB*
Linearity [29]	75 GHz to 110 GHz	*0.010 dB*
	>110 GHz to 170 GHz	*0.014 dB*
Temperature effect [30]		< 0.004 dB/K
Host interface	mechanical	8-pin male M12 connector (A-coded)
	power supply	+5 V/0.5 A (USB high-power device)
	speed	supports high-speed and full-speed modes according to the specification
	remote control protocols	supports USB test and measurement device class (USBTMC) and legacy mode for compatibility with R&S®NRP-Zxx power sensors
	trigger input EXTernal[1]	differential (0 V/+3.3 V)
	reference clock	
	signal level	LVDS
	frequency	20 MHz
	permissible total cable length	≤ 5 m
Ethernet interface only for R&S®NRPxxTN types	mechanical	RJ-45 jack
	power supply	power over Ethernet (PoE) class 1 device
	speed	10/100/1000 Mbit/s
	remote control protocols	VXI11, HiSLIP (high-speed LAN instrument protocol), SCPI-RAW (port 5025)
	permissible cable length	≤ 100 m
Trigger-I/O EXTernal2	mechanical	SMB built-in jack
	impedance	
	input	10 kΩ (nom.) or 50 Ω (nom.) selectable
	output	50 Ω (nom.)
	signal level	
	input	compatible with 3 V or 5 V logic, max. –1 V to +6 V
	output	≥ 2 V into 50 Ω load, max. 5.3 V
Dimensions (W × H × L)	R&S®NRPxxTWG	48 mm × 30 mm × 128 mm (1.89 in × 1.18 in × 5.04 in)
	R&S®NRPxxTWGN	73 mm × 26 mm × 136 mm (2.87 in × 1.02 in × 5.35 in)
Weight	R&S®NRPxxTWG	< 0.20 kg (0.44 lb)
	R&S®NRPxxTWGN	< 0.35 kg (0.77 lb)

Accessories for R&S®NRP power sensors

Accessories are not approved for the usage in thermal vacuum chambers.

R&S®NRP-ZKU interface cables

The R&S®NRP-ZKU interface cables are used to connect Rohde & Schwarz power sensors described in this data sheet to any standard-conforming USB downstream port (USB-A receptacle), e.g. on a PC, USB hub or a Rohde & Schwarz instrument.

Connectors	sensor side	8-pin female M12 connector (A-coded)
	host side	USB-A plug
Length	model .02	0.75 m
	model .03	1.50 m
	model .04	3.00 m
	model .05	5.00 m

The R&S®NRP-ZKU interface cables must not be combined with passive USB extension cables as well as commercially available M12 extension cables. Using such extension cables can affect the reliability of the high-speed data transfer.

R&S®NRP-ZKC interface cables

The R&S®NRP-ZKC interface cables are used to connect Rohde & Schwarz power sensors described in this data sheet to any standard-conforming USB downstream port (USB-C receptacle), e.g. on a PC or mobile device.

Connectors	sensor side	8-pin female M12 connector (A-coded)
	host side	USB-C plug
Length	model .02	0.75 m
	model .03	1.50 m
	model .04	3.00 m

The R&S®NRP-ZKC interface cables must not be combined with passive USB extension cables as well as commercially available M12 extension cables. Using such extension cables can affect the reliability of the high-speed data transfer.

R&S®NRP-ZK6 interface cables

The R&S®NRP-ZK6 interface cables are used to connect Rohde & Schwarz power sensors described in this data sheet to an R&S®NRX power meter, R&S®NRP2 power meter, R&S®NRP-Z5 sensor hub or a Rohde & Schwarz instrument providing a 6-pole circular receptacle for R&S®NRP power sensors.

Connectors	sensor side	8-pin female M12 connector (A-coded)
	host side	6-pole circular plug with push-pull locking
Length	model .02	1.50 m
	model .03	3.00 m
	model .04	5.00 m

The R&S®NRP-ZK6 interface cables must not be combined with the R&S®NRP-Z2/-Z3/-Z4 cables as well as commercially available M12 extension cables. Using such extension or adapter cables can affect the reliability of the high-speed data transfer.

R&S®NRP-ZK8 interface cables

The R&S®NRP-ZK8 interface cables are used to connect Rohde & Schwarz power sensors described in this data sheet to an R&S®NRX power meter. Compared to R&S®NRP-ZK6, they contain an additional signal pair for routing the common time base clock provided by the NRX to sensors A, B, C and D.

Connectors	sensor side	8-pin female M12 connector (A-coded)
	host side	8-pole circular plug with push-pull locking
Length	model .02	1.50 m
	model .03	3.00 m
	model .04	5.00 m

The R&S®NRP-ZK8 interface cables must not be combined with commercially available M12 extension cables. Using such extension cables can affect the reliability of the high-speed data transfer.

R&S®NRP-ZKVSRJ Ethernet cables for TVAC applications

The R&S®NRP-ZKVSRJ Gigabit Ethernet cables are used to connect the R&S®NRP33SN-V and R&S®NRP67SN-V power sensors to a PoE-capable Ethernet switch, a PoE injector or to the vacuum side of an RJ-45 vacuum feedthrough.

Connectors		2 × RJ-45
Length	model .02	1.50 m
	model .03	3.00 m
	model .05	5.00 m
	model .15	15.00 m
	model .30	30.00 m
	model .60	60.00 m
Electrical specifications	cable category	Cat. 6
	conductor type	26 AWG (stranded)
Temperature range	operating and non-operating	–40 °C to +120 °C
Vacuum-specific specifications	insulation and sheath material	FEP
	bake-out procedure (performed in factory)	vacuum bake for 72 h at (100 ± 10) °C and $P < 5 \cdot 10^{-4}$ mbar, in line with MSFC-SPEC-684
	packaging	metalized polyester foil, vacuum welded

R&S®NRP-ZKVSMD Ethernet cables for TVAC applications

The R&S®NRP-ZKVSMD Gigabit Ethernet cables are used to connect the R&S®NRP33SN-V and R&S®NRP67SN-V power sensors to the vacuum side of a 15-pole Micro-D (f) vacuum feedthrough. They are complemented by the R&S®NRP-ZKASMD air side cables.

Connectors		1 × RJ-45
		1 × Micro-D (m), in line with MIL-DTL-83513
Length	model .02	1.50 m
	model .03	3.00 m
	model .05	5.00 m
	model .15	15.00 m
	model .30	30.00 m
	model .60	60.00 m
Electrical specifications	cable category	Cat. 6
	conductor type	26 AWG (stranded)
Temperature range	operating and non-operating	–40 °C to +120 °C
Vacuum-specific specifications	insulation and sheath material	FEP
	bake-out procedure (performed in factory)	vacuum bake for 72 h at (100 ± 10) °C and $P < 5 \cdot 10^{-4}$ mbar, in line with MSFC-SPEC-684
	packaging	metalized polyester foil, vacuum welded

R&S®NRP-ZKASMD Ethernet cables (air side cables)

The R&S®NRP-ZKASMD Gigabit Ethernet cables are used to connect the air side of a 15-pole Micro-D (f) vacuum feedthrough to a PoE-capable Ethernet switch, a PoE injector, etc. The pinout of the Micro-D connector matches the R&S®NRP-ZKVSMD vacuum side cables.

Connectors		1 × Micro-D (m), in line with MIL-DTL-83513
		1 × RJ-45
Length	model .02	1.50 m
	model .03	3.00 m
	model .05	5.00 m
	model .15	15.00 m
	model .30	30.00 m
	model .60	60.00 m
Electrical specifications	cable category	Cat. 6
	conductor type	26 AWG (stranded)
Temperature range	operating and non-operating	–20 °C to +120 °C
Vacuum-specific specifications	insulation and sheath material	FEP
	bake-out procedure (performed in factory)	none

The R&S®NRP-ZKASMD cables have a visible marking that identifies them as air side cables. Though they are not designed for vacuum use and are not vacuum baked in factory, their FEP insulation and sheathing prevents serious contamination of the vacuum chamber through inadvertent vacuum-side use.

General data for R&S®NRP power sensors and accessories

Temperature [31]	R&S®NRPxxS(N), R&S®NRP18S-10/-20/-25 R&S®NRPxxT(N), R&S®NRPxxA(N), R&S®NRP-ZKx	
	operating temperature range	0 °C to +50 °C
	permissible temperature range	–10 °C to +55 °C
	storage temperature range	–40 °C to +85 °C
	R&S®NRP33SN-V/67SN-V	
	operating temperature range	0 °C to +50 °C
	permissible temperature range	–10 °C to +60 °C
	storage temperature range	–40 °C to +85 °C
Climatic resistance	damp heat	+25 °C/+55 °C cyclic at 95 % relative humidity with restrictions: noncondensing, in line with EN 60068-2-30
Mechanical resistance	vibration	
	sinusoidal	5 Hz to 55 Hz, 0.15 mm amplitude, 1.8 g at 55 Hz, 55 Hz to 150 Hz, 0.5 g constant, in line with EN 60068-2-6
	random	8 Hz to 650 Hz, 1.9 g (RMS), in line with EN 60068-2-64
	shock	45 Hz to 2 kHz, max. 40 g shock spectrum, in line with MIL-STD-810E, method 516.4, procedure I
Altitude	R&S®NRPxxS(N), R&S®NRP18S-10/-20/-25 R&S®NRPxxT(N), R&S®NRPxxA(N), R&S®NRP-ZKx	
	operating	max. 2000 m
	transport	max. 15000 m
Air pressure	R&S®NRP33SN-V/67SN-V	
	operating [32]	0 hPa to 1060 hPa
	transport	0 hPa to 1060 hPa
Electromagnetic compatibility	EU: in line with EMC Directive 2014/30/EU	applied harmonized standards: • EN 61326-1 (industrial environment) • EN 55011 (class B)
RoHS	EU: in line with Directive 2011/65/EU on the restriction of the use of certain hazardous substances in electrical and electronic equipment	applied harmonized standard: EN IEC 63000
Calibration interval	recommended	2 years

R&S®NRX base unit

Application		universal power meter
Sensors		R&S®NRPxxS(N), R&S®NRPxxA(N), R&S®NRPxxT(N), R&S®NRPxxTWG(N), R&S®NRP-Zxx and R&S®NRQ6
Sensor connectors	standard	two sensor connectors (A and B) on front panel
	with R&S®NRX-B4 option	two additional sensor connectors (C and D) on rear panel
	connector	8-pole receptacle; mates with R&S®NRP-ZK8, R&S®NRP-ZK6 and 6-pole push-pull plug of R&S®NRP-Zxx series sensors
Measurement channels	standard	one measurement channel
	with R&S®NRX-K2 option	two measurement channels
	with R&S®NRX-K2 and R&S®NRX-K4 options	four measurement channels
Frequency range		DC to 170 GHz (sensor-dependent)
Power measurement range		0.1 fW to 30 W (average) (sensor-dependent)
Measurement functions		
Single channel		see sensor specifications, plus: relative measurement referenced to result or user-selectable reference value, storage of minima and maxima (max., min., max. – min.), limit monitoring
	display	
	absolute	in W, dBm and dBµV
	relative	in dB, as change in percent (Δ %) or as quotient
Multichannel		simultaneous measurement in up to 4 channels; individual results, ratios, relative ratios [33], or difference of results of 2 channels can be displayed
	display	
	ratio	in dB, as change in percent (Δ %), as quotient or as one of the following impedance matching parameters: SWR, return loss, reflection coefficient
	relative ratio [33]	in dB, as change in percent (Δ %) or as quotient
Measurement uncertainty		see sensor specifications
Accuracy of common time base clock for sensors A, B, C and D		±5 ppm (R&S®NRP-ZK8 required)
Display		
Physical characteristics	type	127 mm (5") TFT color display
	resolution	800 × 480 pixel (WVGA)
Result representation	numeric measurements	up to four results can simultaneously be displayed in separate windows using selectable layouts: • full-size • 2 × half-size • half-size + 2 × 1/4-size • half-size + 3 × 1/6-size
	format	digital, digital + bargraph
	resolution	
	digital values	selectable in four steps: • 1 dB/1.0 %/2 ½ digits (W, quotient) • 0.1 dB/1.0 %/2 ½ digits (W, quotient) • 0.01 dB/0.1 %/3 ½ digits (W, quotient) • 0.001 dB/0.01 %/4 ½ digits (W, quotient)
	bargraph	depending on user-definable scale end values
	auxiliary values (optional in full- or half-size windows)	
	extremes	maximum, minimum, maximum – minimum
	statistical parameters	mean, standard deviation, measurement count
	measurement of power versus time	one or two traces can be displayed in one window: • absolute power • ratio of two channels • sum of two channels • difference of two channels
	additional information	• marker measurements • gate and timeslot measurements

	power envelope statistics	versus absolute power in dBm or versus relative power referenced to the average power level: • CCDF • CDF • PDF
	additional information	marker measurements
Manual operation		via capacitive touch panel and/or keypad
Remote control		
Systems		IEC 60625.1 (IEEE 488.1), IEC 60625.2 (IEEE 488.2)
Command set		SCPI-1999.0
IEC/IEEE bus (R&S®NRX-B8 option)	interface functions	SH1, AH1, T6, L4, SR1, RL1, PP1, DC1, DT1, C0
	connector	24-pin Amphenol (female)
USB		USB 2.0 high-speed
	connector	USB type B receptacle
	supported protocols	USBTMC via VISA
Ethernet		10/100/1000BASE-T
	connector	RJ-45 modular socket
	supported protocols	VXI-11, HiSLIP, SCPI-RAW
Measurement times	single continuous average measurements, with `SYSTem:SPEed FAST`	add 2 ms (meas.) to sensor specifications
Analog outputs and trigger I/O		
Out 1/Trig Out	Out 1 (analog output 1)	recorder output; user-definable linear relation to measurement result
	output voltage range	0 V to 2.5 V (no load)
	output resistance	600 Ω (nom.)
	accuracy of no-load output voltage	±(0.4 % of output voltage + 4 mV)
	resolution	16 bit
	update rate	same as result rate of sensor
	Trig Out (trigger output)	signaling output; user-definable logic levels for the PASS and FAIL states in the case of limit monitoring
	high-level output voltage	(5.1 ± 0.2) V (≥ 10 kΩ load), 2.6 V (nom.) (50 Ω load)
	low-level output voltage	0 V to 0.4 V (meas.) (5 mA sink current)
	output impedance	50 Ω (nom.)
	connector	BNC (female)
Trig In/Out 2	Trig In (trigger input)	input for trigger signals to sensors (routed internally to ports Sensor A–D; translated to *TRG command for sensors operated on standard USB ports and via network)
	input impedance	10 kΩ (nom.) or 50 Ω (nom.) selectable
	absolute minimum voltage	−3 V
	absolute maximum voltage	6 V (with 10 kΩ input impedance), 4 V (with 50 Ω input impedance)
	low-to-high input threshold	(1.8 ± 0.3) V
	high-to-low input threshold	(1.15 ± 0.25) V
	Out 2 (analog output 2)	recorder output; user-definable linear relation to measurement result
	electrical characteristics	see Out 1
	connector	BNC (female)
USB host ports		two USB 2.0 high-speed host ports (one on front panel, one on rear panel)
	connector	USB type A receptacle
Firmware update		• from a USB flash memory stick (copy .rsu file to root directory and connect to either USB host port of R&S®NRX) • from the R&S®NRP toolkit via Ethernet or USBTMC using a Windows program; VISA installation is required
Environmental conditions		
Temperature	operating temperature range	0 °C to +50 °C
	permissible temperature range	–10 °C to +55 °C
	storage temperature range	–40 °C to +70 °C
Damp heat	noncondensing	+25 °C/+55 °C, 95 % rel. humidity, cyclic, in line with EN 60068-2-30
Altitude	operating or nonoperating	max. 4600 m

Mechanical resistance		
Vibration	sinusoidal	5 Hz to 55 Hz, 0.15 mm amplitude const., 55 Hz to 150 Hz, acceleration 0.5 g const., in line with EN 60068-2-6
	random	10 Hz to 500 Hz, acceleration 1.9 g (RMS), in line with EN 60068-2-64
Shock		40 g shock spectrum, in line with MIL-STD-810E, method 516.4, procedure I
Power rating		
Rated voltage	nominal voltage	100 V to 240 V
	voltage range	90 V to 264 V
Rated frequency	nominal frequency	50 Hz to 60 Hz or 400 Hz
	frequency range	47 Hz to 63Hz or 380 Hz to 420 Hz
Rated current (including options, connected sensors and connected USB devices)	at 100 V AC	max. 1.7 A
	at 240 V AC	max. 0.8 A
Product conformity		
Electromagnetic compatibility	EU: in line with EMC Directive 2014/30/EU	applied harmonized standards: • EN 61326-1 (industrial environment) • EN 55011 (class B)
Electrical safety	EU: in line with Low Voltage Directive 2014/35/EU	applied harmonized standard: EN 61010-1
	USA	UL 61010-1
	Canada	CAN/CSA-C22.2 No. 61010-1
RoHS	EU: in line with Directive 2011/65/EU on the restriction of the use of certain hazardous substances in electrical and electronic equipment	applied harmonized standard: EN IEC 63000
Dimensions	W × H × D	234 mm × 106 mm × 272 mm (9.21 in × 4.17 in × 10.71 in)
Weight	without any options installed	2.35 kg (5.18 lb)
	with R&S®NRX-B1, R&S®NRX-B4 and R&S®NRX-B8 options installed	2.58 kg (5.69 lb)

Options for the R&S®NRX base unit

R&S®NRX-B1 sensor check source	application	as a power reference for testing sensors
	mutually exclusive with	R&S®NRX-B9
	frequency	50 MHz (nom.) or 1 GHz (nom.) selectable
	power	
	CW and pulses	−20 dBm (10 µW), −10 dBm (100 µW), 0 dBm (1 mW), +10 dBm (10 mW)
	CW only	+20 dBm (100 mW)
	uncertainty	
	+20 °C to +25 °C	*0.85 %* at 50 MHz, *1.00 %* at 1 GHz
	+15 °C to +35 °C	*1.00 %* at 50 MHz, *1.20 %* at 1 GHz
	0 °C to +50 °C	
	power level setting: 0 dBm	*1.00 %* at 50 MHz
	power level settings: −20 dBm, −10 dBm, +10 dBm, +20 dBm	*1.30 %* at 50 MHz
	all power level settings	*1.50 %* at 1 GHz
	pulse repetition frequency	10 kHz ± 5 ppm [34]
	duty cycle	(50 ± 0.02) %
	on/off ratio	60 dB (typ.)
	rise/fall time	5 ns (typ.) at 1 GHz, 20 ns (typ.) at 50 MHz
	SWR	< 1.05 (typ.)
	RF connector	N (female) on front panel
	source impedance	50 Ω (nom.)
	weight	0.155 kg
	recommended calibration interval	2 years
R&S®NRX-B4 third (C) and fourth (D) sensor connector	application	provides two additional sensor connectors on rear panel
	weight	0.025 kg
R&S®NRX-B8 GPIB/IEEE488 interface	application	provides a GPIB/IEEE488 interface
	weight	0.055 kg
R&S®NRX-B9 interface for R&S®NRT-Z sensors	application	provides an additional connector for R&S®NRT-Z14, R&S®NRT-Z43 or R&S®NRT-Z44 directional power sensors
	mutually exclusive with	R&S®NRX-B1
	connector	LEMO S series, ERA model, size 2, 6-pole receptacle on front panel (1: RXD+, 2: RXD−, 3: V_{SUPPLY}, 4: GND, 5: TXD−, 6: TXD+)
	weight	0.135 kg
R&S®NRX-K2 second measurement channel	application	allows using up to two sensors simultaneously
R&S®NRX-K4 third and fourth measurement channel	application	allows using up to four sensors simultaneously (R&S®NRX-K2 required)

Appendix

Reading the uncertainty of multipath power sensors for relative power measurements

The example shows a level step of approx. 14 dB (–4 dBm → +10 dBm) at 1.9 GHz and an ambient temperature of +28 °C for an R&S®NRP8S power sensor. The expanded uncertainty for relative power measurements in this example is 0.093 dB.

100 MHz to 2.4 GHz

	+23	0.213	0.217	0.027	0 °C to +50 °C
		0.093	0.093	0.026	+15 °C to +35 °C
	+6	0.046	0.040	0.026	+20 °C to +25 °C
Power level 1 –4 dBm	0	0.208	0.028	0.217	0 °C to +50 °C
		0.090	0.024	***0.093***	**+15 °C to +35 °C**
	–14	0.043	0.023	0.040	+20 °C to +25 °C
	–20	0.022	0.208	0.213	0 °C to +50 °C
		0.022	0.090	0.093	+15 °C to +35 °C
	–70	0.022	0.043	0.046	+20 °C to +25 °C
		–70	–20 –14	0 +6	+23

Power level 2: +10 dBm

Technical drawings of the R&S®NRP33SN-V/-67SN-V TVAC-compliant three-path diode power sensor

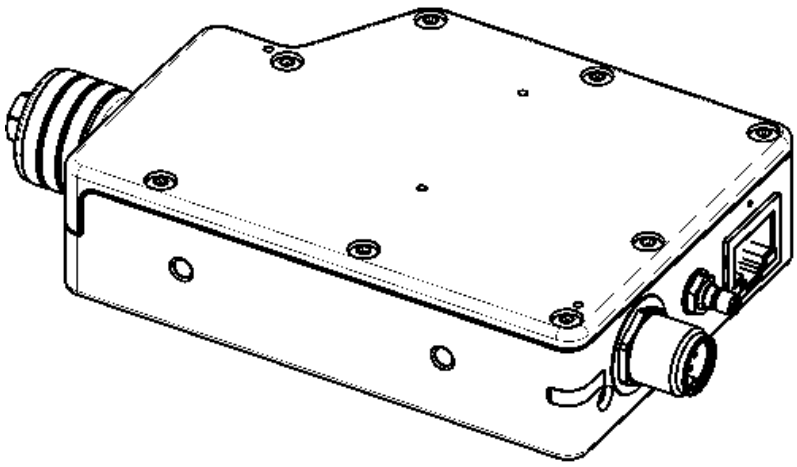

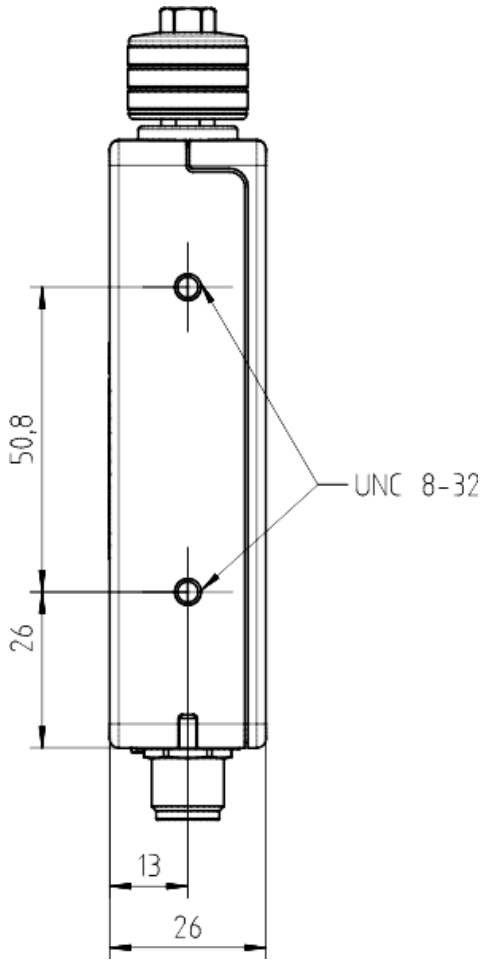

Dimensions in mm

Ordering information

Designation	Type	Order No.
Base unit		
Power meter	R&S®NRX	1424.7005.02
Options for the R&S®NRX base unit		
Second measurement channel	R&S®NRX-K2	1424.9208.02
Third and fourth measurement channel	R&S®NRX-K4	1424.9308.02
Sensor check source	R&S®NRX-B1	1424.7805.02
Third (C) and fourth (D) sensor connector, for R&S®NRP	R&S®NRX-B4	1424.8901.02
GPIB/IEEE488 interface	R&S®NRX-B8	1424.8301.02
Sensor interface, for R&S®NRT	R&S®NRX-B9	1424.8601.02
Three-path diode power sensors		
100 pW to 200 mW, 10 MHz to 8 GHz	R&S®NRP8S	1419.0006.02
100 pW to 200 mW, 10 MHz to 8 GHz, LAN version	R&S®NRP8SN	1419.0012.02
100 pW to 200 mW, 10 MHz to 18 GHz	R&S®NRP18S	1419.0029.02
100 pW to 200 mW, 10 MHz to 18 GHz, LAN version	R&S®NRP18SN	1419.0035.02
100 pW to 200 mW, 10 MHz to 33 GHz	R&S®NRP33S	1419.0064.02
100 pW to 200 mW, 10 MHz to 33 GHz, LAN version	R&S®NRP33SN	1419.0070.02
100 pW to 100 mW, 50 MHz to 40 GHz	R&S®NRP40S	1419.0041.02
100 pW to 100 mW, 50 MHz to 40 GHz, LAN version	R&S®NRP40SN	1419.0058.02
100 pW to 100 mW, 50 MHz to 50 GHz	R&S®NRP50S	1419.0087.02
100 pW to 100 mW, 50 MHz to 50 GHz, LAN version	R&S®NRP50SN	1419.0093.02
100 pW to 100 mW, 50 MHz to 67 GHz	R&S®NRP67S	1424.6396.02
100 pW to 100 mW, 50 MHz to 67 GHz, LAN version	R&S®NRP67SN	1424.6409.02
100 pW to 100 mW, 50 MHz to 90 GHz, 1.35 mm connector	R&S®NRP90S	1424.6421.02
100 pW to 100 mW, 50 MHz to 90 GHz, 1.00 mm connector	R&S®NRP90S	1424.6421.03
100 pW to 100 mW, 50 MHz to 90 GHz, LAN version, 1.35 mm connector	R&S®NRP90SN	1424.6450.02
High-power three-path diode power sensors		
1 nW to 2 W, 10 MHz to 18 GHz	R&S®NRP18S-10	1424.6721.02
10 nW to 15 W, 10 MHz to 18 GHz	R&S®NRP18S-20	1424.6738.02
30 nW to 30 W, 10 MHz to 18 GHz	R&S®NRP18S-25	1424.6744.02
TVAC-compliant three-path diode power sensor		
100 pW to 200 mW, 10 MHz to 33 GHz, LAN version, TVAC-compliant	R&S®NRP33SN-V	1419.0129.02
100 pW to 100 mW, 50 MHz to 67 GHz, LAN version, TVAC-compliant	R&S®NRP67SN-V	1424.6415.02
Thermal power sensors		
300 nW to 100 mW, DC to 18 GHz	R&S®NRP18T	1424.6115.02
300 nW to 100 mW, DC to 18 GHz, LAN version	R&S®NRP18TN	1424.6121.02
300 nW to 100 mW, DC to 33 GHz	R&S®NRP33T	1424.6138.02
300 nW to 100 mW, DC to 33 GHz, LAN version	R&S®NRP33TN	1424.6144.02
300 nW to 100 mW, DC to 40 GHz	R&S®NRP40T	1424.6150.02
300 nW to 100 mW, DC to 40 GHz, LAN version	R&S®NRP40TN	1424.6167.02
300 nW to 100 mW, DC to 50 GHz	R&S®NRP50T	1424.6173.02
300 nW to 100 mW, DC to 50 GHz, LAN version	R&S®NRP50TN	1424.6180.02
300 nW to 100 mW, DC to 67 GHz	R&S®NRP67T	1424.6196.02
300 nW to 100 mW, DC to 67 GHz, LAN version	R&S®NRP67TN	1424.6209.02
300 nW to 100 mW, DC to 90 GHz	R&S®NRP90T	1424.6473.02
300 nW to 100 mW, DC to 90 GHz, LAN version	R&S®NRP90TN	1424.6480.02
300 nW to 100 mW, DC to 110 GHz	R&S®NRP110T	discontinued product
300 nW to 100 mW, DC to 125 GHz	R&S®NRP125T	1440.6400.02
Thermal waveguide power sensors		
300 nW to 100 mW, 50 GHz to 75 GHz	R&S®NRP75TWG	1700.2529.02
300 nW to 100 mW, 50 GHz to 75 GHz, LAN version	R&S®NRP75TWGN	1440.5010.02
300 nW to 100 mW, 60 GHz to 90 GHz	R&S®NRP90TWG	1700.2312.02
300 nW to 100 mW, 60 GHz to 90 GHz, LAN version	R&S®NRP90TWGN	1440.5078.02
300 nW to 100 mW, 75 GHz to 110 GHz	R&S®NRP110TWG	1173.8709.02
300 nW to 100 mW, 75 GHz to 110 GHz, LAN version	R&S®NRP110TWGN	1440.5132.02
300 nW to 100 mW, 90 GHz to 140 GHz	R&S®NRP140TWG	1440.5190.02
300 nW to 100 mW, 90 GHz to 140 GHz, LAN version	R&S®NRP140TWGN	1440.5378.02
300 nW to 100 mW, 110 GHz to 170 GHz	R&S®NRP170TWG	1700.3754.02
300 nW to 100 mW, 110 GHz to 170 GHz, LAN version	R&S®NRP170TWGN	1440.5432.02
Average power sensors		
100 pW to 200 mW, 8 kHz to 6 GHz	R&S®NRP6A	1424.6796.02
100 pW to 200 mW, 8 kHz to 6 GHz, LAN version	R&S®NRP6AN	1424.6809.02
100 pW to 200 mW, 8 kHz to 18 GHz	R&S®NRP18A	1424.6815.02
100 pW to 200 mW, 8 kHz to 18 GHz, LAN version	R&S®NRP18AN	1424.6821.02

Designation	Type	Order No.
Recommended extras for R&S®NRX		
19" rack adapter, for one R&S®NRX power meter and one empty casing	R&S®ZZA-KNA22	1177.8184.00
19" rack adapter, for two R&S®NRX power meters	R&S®ZZA-KNA24	1177.8149.00
Recommended extras for R&S®NRPxxS(N)/T(N)/A(N) A minimum of one interface cable is required for power sensor operation.		
USB-A interface cable, length: 0.75 m	R&S®NRP-ZKU	1419.0658.02
USB-A interface cable, length: 1.50 m	R&S®NRP-ZKU	1419.0658.03
USB-A interface cable, length: 3.00 m	R&S®NRP-ZKU	1419.0658.04
USB-A interface cable, length: 5.00 m	R&S®NRP-ZKU	1419.0658.05
USB-C interface cable, length: 0.75 m	R&S®NRP-ZKC	1425.2442.02
USB-C interface cable, length: 1.50 m	R&S®NRP-ZKC	1425.2442.03
USB-C interface cable, length: 3.00 m	R&S®NRP-ZKC	1425.2442.04
6-pole interface cable, length: 1.50 m	R&S®NRP-ZK6	1419.0664.02
6-pole interface cable, length: 3.00 m	R&S®NRP-ZK6	1419.0664.03
6-pole interface cable, length: 5.00 m	R&S®NRP-ZK6	1419.0664.04
8-pole interface cable, length: 1.50 m	R&S®NRP-ZK8	1424.9408.02
8-pole interface cable, length: 3.00 m	R&S®NRP-ZK8	1424.9408.03
8-pole interface cable, length: 5.00 m	R&S®NRP-ZK8	1424.9408.04
Ethernet cable for TVAC applications, 2 × RJ-45, length: 1.50 m	R&S®NRP-ZKVSRJ	1425.2407.02
Ethernet cable for TVAC applications, 2 × RJ-45, length: 3.00 m	R&S®NRP-ZKVSRJ	1425.2407.03
Ethernet cable for TVAC applications, 2 × RJ-45, length: 5.00 m	R&S®NRP-ZKVSRJ	1425.2407.05
Ethernet cable for TVAC applications, 2 × RJ-45, length: 15.00 m	R&S®NRP-ZKVSRJ	1425.2407.15
Ethernet cable for TVAC applications, 2 × RJ-45, length: 30.00 m	R&S®NRP-ZKVSRJ	1425.2407.30
Ethernet cable for TVAC applications, 2 × RJ-45, length: 60.00 m	R&S®NRP-ZKVSRJ	1425.2407.60
Ethernet cable for TVAC applications, RJ-45 to Micro-D, length: 1.50 m	R&S®NRP-ZKVSMD	1425.2413.02
Ethernet cable for TVAC applications, RJ-45 to Micro-D, length: 3.00 m	R&S®NRP-ZKVSMD	1425.2413.03
Ethernet cable for TVAC applications, RJ-45 to Micro-D, length: 5.00 m	R&S®NRP-ZKVSMD	1425.2413.05
Ethernet cable for TVAC applications, RJ-45 to Micro-D, length: 15.00 m	R&S®NRP-ZKVSMD	1425.2413.15
Ethernet cable for TVAC applications, RJ-45 to Micro-D, length: 30.00 m	R&S®NRP-ZKVSMD	1425.2413.30
Ethernet cable for TVAC applications, RJ-45 to Micro-D, length: 60.00 m	R&S®NRP-ZKVSMD	1425.2413.60
Ethernet cable (air side cable), Micro-D to RJ-45, length: 1.50 m	R&S®NRP-ZKASMD	1425.2420.02
Ethernet cable (air side cable), Micro-D to RJ-45, length: 3.00 m	R&S®NRP-ZKASMD	1425.2420.03
Ethernet cable (air side cable), Micro-D to RJ-45, length: 5.00 m	R&S®NRP-ZKASMD	1425.2420.05
Ethernet cable (air side cable), Micro-D to RJ-45, length: 15.00 m	R&S®NRP-ZKASMD	1425.2420.15
Ethernet cable (air side cable), Micro-D to RJ-45, length: 30.00 m	R&S®NRP-ZKASMD	1425.2420.30
Ethernet cable (air side cable), Micro-D to RJ-45, length: 60.00 m	R&S®NRP-ZKASMD	1425.2420.60
Sensor hub	R&S®NRP-Z5	1146.7740.02
Recommended extras for waveguide connectors		
Torque wrench SW 3/32 (for waveguide screws)	R&S®ZCTW	1175.2014.02
Recommended extras for R&S®NRP110T/125T and R&S®NRP90S (1424.6421.03)		
Waveguide bracket for R&S®NRP110T/125T and R&S®NRP90S (1424.6421.03)	R&S®NRP-ZBW	1700.2141.02
WR15 to 1 mm (f) adapter	R&S®WCA75	3626.1044.02
WR12 to 1 mm (f) adapter	R&S®WCA90	3626.1050.02
WR10 to 1 mm (f) adapter	R&S®WCA110	3626.1067.02

Designation	Type	Order No.
Documentation		
Documentation of calibration values	R&S®DCV-1	0240.2187.06
Printout of DCV (in combination with DCV only)	R&S®DCV-ZP	1173.6506.02
Accredited calibration for R&S®NRX-B1, R&S®NRPxxS(N), R&S®NRPxxA(N), R&S®NRPxxT(N) and R&S®NRPxxTWG(N)	R&S®NRP-ACA	1419.0812.00

Warranty and service

Warranty		
Base unit		3 years
All other items		1 year
Service options		
	Service plans	**On demand**
Calibration	up to five years [35]	pay per calibration
Warranty and repair	up to five years [35]	standard price repair
Contact your Rohde & Schwarz sales office for further details.		

For product brochure, see PD 5213.5539.12 and www.rohde-schwarz.com

Endnotes

[1] Specifications apply to timeslots/gates with a duration of 12.5 % referenced to the signal period (duty cycle 1:8). For other waveforms, the following equation applies: lower measurement limit = lower measurement limit for continuous average mode / √(duty cycle).

[2] With a resolution of 256 pixel.

[3] Specifications apply to the default transition setting of 0 dB. The transition regions can be shifted by as much as –20 dB using an adequate offset.

[4] Time span prior to triggering, where the trigger signal must be entirely below the threshold level in the case of a positive slope and vice versa in the case of a negative slope.

[5] Specifications expressed as an expanded uncertainty with a confidence level of 95 % (two standard deviations). For calculating zero offsets at higher confidence levels, use the properties of the normal distribution (e.g. 99.7 % confidence level for three standard deviations).

[6] Within one hour after zeroing, permissible temperature change ±1 °C, following a two-hour warm-up of the power sensor.

[7] Two standard deviations at 10.24 s integration time in continuous average mode, with aperture time set to default value.
The integration time is defined as the total time used for signal acquisition, i.e. the product of twice the aperture time and the averaging number. Multiplying the noise specifications by √(10.24 s/integration time) yields the noise contribution at other integration times. Using a von Hann window function increases noise by a factor of 1.22.

[8] Expanded uncertainty (k = 2) for absolute power measurements on CW signals with automatic path selection and the default transition setting of 0 dB. Specifications include calibration uncertainty, linearity and temperature effect. Zero offset, zero drift and measurement noise must additionally be taken into account when measuring low powers. As a rule of thumb, the contribution of zero offset can be neglected for power levels above –40 dBm. The contribution of measurement noise depends on power and integration time and can be neglected below 0.01 dB.

Example: The uncertainty of a power measurement at 3.2 nW (–55 dBm) and 1.9 GHz is to be determined for an R&S®NRP8S. The ambient temperature is +29 ºC and the averaging number is set to 32 in the continuous average mode with an aperture time of 20 ms.

Since path 1 is used for the measurement, the typical absolute uncertainty due to zero offset is 28 pW (typical) after external zeroing, which corresponds to a relative measurement uncertainty of

$$10\ \lg \frac{3.2\ \text{nW} + 28\ \text{pW}}{3.2\ \text{nW}}\ \text{dB} = 0.038\ \text{dB}.$$

Using the formula in footnote 7, the absolute noise contribution of path 1 is typically 20 pW × √(10.24 s/(32 × 2 × 0.02 s)) = 56.6 pW, which corresponds to a relative measurement uncertainty of

$$10\ \lg \frac{3.2\ \text{nW} + 56.6\ \text{pW}}{3.2\ \text{nW}}\ \text{dB} = 0.076\ \text{dB}.$$

Combined with the uncertainty of 0.084 dB for absolute power measurements under the given conditions, the total expanded uncertainty is

$$\sqrt{0.038^2 + 0.076^2 + 0.084^2}\ \text{dB} = 0.119\ \text{dB}.$$

The contribution of zero drift has been neglected in this case. It must be treated like zero offset if it is relevant for total uncertainty.

[9] Expanded uncertainty (k = 2) for relative power measurements on CW signals of the same frequency with automatic path selection and a default transition setting of 0 dB. For reading the measurement uncertainty diagrams of universal, average and level control sensors, see the Appendix.

Specifications include calibration uncertainty (only if different paths are affected), linearity and temperature effect. Zero offset, zero drift and measurement noise must additionally be taken into account when measuring low powers. As a rule of thumb, the contribution of zero offset can be neglected for power levels above –40 dBm. The contribution of measurement noise depends on power and integration time and can be neglected below 0.01 dB.

Example: The uncertainty of a power step from 0.5 mW (–3 dBm) to 10 nW (–50 dBm) at 5.4 GHz is to be determined for an R&S®NRP8S. The ambient temperature is +20 ºC and the averaging number is set to 16 for both measurements in the continuous average mode with an aperture time of 20 ms. For the calculation of total uncertainty, the relative contribution of noise, zero offset and zero drift must be taken into account for both measurements. In this example, all contributions at –3 dBm and the effect of zero drift at –50 dBm have been neglected.

Since path 1 is used for the –50 dBm measurement, the typical absolute uncertainty due to zero offset is 28 pW after external zeroing, which corresponds to a relative measurement uncertainty of

$$10\ \lg \frac{10\ \text{nW} + 28\ \text{pW}}{10\ \text{nW}}\ \text{dB} = 0.012\ \text{dB}.$$

Using the formula in footnote 7, the absolute noise contribution of path 1 is typically 20 pW × √(10.24 s/(16 × 2 × 0.02 s)) = 80 pW, which corresponds to a relative measurement uncertainty of

$$10\ \lg \frac{10\ \text{nW} + 80\ \text{pW}}{10\ \text{nW}}\ \text{dB} = 0.035\ \text{dB}.$$

Combined with the uncertainty of 0.050 dB for relative power measurements under the given conditions, the total expanded uncertainty is

$$\sqrt{0.012^2 + 0.035^2 + 0.050^2}\ \text{dB} = 0.062\ \text{dB}.$$

[10] Specifications are based on the assumption that the measurements follow each other so fast (at intervals of no more than 10 s) that the temperature of the power attenuator does not change significantly. In the case of the R&S®NRP18S-10, the average power must not exceed 1 W to be compliant with accuracy specifications for relative power measurements. For the R&S®NRP18S-20, the maximum average power is 10 W. For the R&S®NRP18S-20, maximum average power is 20 W for compliance with the specifications for relative power measurements.

[11] Gamma correction activated.

[12] Preceding sensor section (nominal value).

[13] Preferably used with determined modulation when the aperture time cannot be matched to the modulation period. Compared to a uniform window, measurement noise is about 22 % higher.

[14] For measuring the power of periodic bursts based on an average power measurement.

[15] To increase measurement speed, the power sensor can be operated in buffered mode. In this mode, measurement results are stored in a buffer of user-definable size and then output as a block of data when the buffer is full. To enhance measurement speed even further, the sensor can be set to record the entire series of measurements when triggered by a single event. In this case, the power sensor automatically starts a new measurement as soon as it has completed the previous one.

[16] For moving mode, the maximum burst width of a single burst is 8 s. For repeat mode the mean burst length is limited to 8 s/averaging number.

[17] This parameter enables power measurements on modulated bursts. The parameter must be longer in duration than modulation-induced power drops within the burst.

[18] To exclude unwanted portions of the signal from the measurement result.

[19] If embedding is used in conjunction with the R&S®NRP18S-10/-20/-25, the data of the RF power attenuator preceding the sensor section is taken into account (automatically upon power-up of the sensor).

[20] Specifications are valid for repeat mode, extending from the beginning to the end of all transfers. The actual values depend on the host system, therefore typical values are specified. They have been measured with a USB connection including one USB hub using the USBTMC protocol and an Ethernet network including one PoE switch using the HiSLIP protocol. For R&S®NRPxxT(N) sensors the specified measurement time is valid for an aperture time less than 100 ms.

[21] Measurement error referenced to a CW signal of equal power and frequency. Specifications apply up to +20 dBm for automatic path selection or within a subrange to the maximum level of the subrange minus 3 dB.

[22] Change of the reflection coefficient (error vector magnitude) referenced to 0 dBm. Applies to the R&S®NRPxxS(N) and the sensor section of the R&S®NRP18S-10/-20/-25.

[23] Expanded uncertainty (k = 2) for absolute power measurements on CW signals at the calibration level within a temperature range from +20 °C to +25 °C and at the calibration frequencies. Specifications include zero offset and measurement noise (up to a 2σ value of 0.004 dB). The calibration level is –20 dBm for path 1 and 0 dBm for paths 2 and 3 and the sensor section of the R&S®NRP18S-10/-20/-25.

[24] Specifications include sensor section and RF power attenuator.

[25] Expanded uncertainty (k = 2) for absolute power measurements. Specifications include calibration uncertainty, linearity and temperature effect. Zero offset and measurement noise must additionally be taken into account when measuring low powers, whereas zero drift is negligible over the entire measurement range. As a rule of thumb, the contribution of zero offset can be neglected for power levels above –20 dBm if external zeroing has been applied. The contribution of measurement noise can be neglected below 0.01 dB.

Example: The power to be measured with an R&S®NRP50TN is 5 µW (–23 dBm) at 48 GHz; ambient temperature +29 ºC; averaging number set to 64 in continuous average mode with an aperture time of 5 ms (default).

The absolute uncertainty due to zero offset (after external zeroing) is 25 nW, which corresponds to a relative measurement uncertainty of

$$10 \lg \frac{5\ \mu W + 25\ nW}{5\ \mu W}\ dB = 0.022\ dB.$$

Using the formula in footnote 7, the absolute noise contribution is 25 nW × √(10.24 s/(64 × 2 × 0.005 s)) = 100 nW, which corresponds to a relative measurement uncertainty of

$$10 \lg \frac{5\ \mu W + 100\ nW}{5\ \mu W}\ dB = 0.086\ dB.$$

Combined with the value of 0.149 dB specified for the uncertainty of absolute power measurements at 48 GHz and +29 ºC ambient temperature, the total expanded uncertainty is

$$\sqrt{0.149^2 + 0.022^2 + 0.086^2}\ dB = 0.173\ dB.$$

[26] Expanded uncertainty (k = 2) for relative power measurements on CW signals of the same frequency. Specifications include linearity and temperature effect. Zero offset and measurement noise must additionally be taken into account when measuring low powers, whereas zero drift is negligible over the entire measurement range. As a rule of thumb, the contribution of zero offset can be neglected for power levels above –20 dBm if external zeroing has been applied. The contribution of measurement noise can be neglected below 0.01 dB. See also the example in footnote 9 for taking into account zero offset and noise with relative measurements.

[27] For R&S®NRP90T(N) absolute accuracy and reflection are calibrated up to 94 GHz. The specified absolute uncertainty for R&S®NRP90T(N) is valid up to 90 GHz. The calibration from 90 GHz to 94 GHz is best effort, with an uncertainty of approximately 0.45 dB. The calibration above 90 GHz is subject to change.

[28] Expanded uncertainty (k = 2) for absolute power measurements at the calibration level (0 dBm) within a temperature range from +20 °C to +25 °C and at the calibration frequencies. Specifications include zero offset and measurement noise (up to a 2σ value of 0.004 dB).

[29] Expanded uncertainty for relative power measurements referenced to the calibration level (0 dBm) within a temperature range from +20 °C to +25 °C, excluding zero offset, zero drift and measurement noise.

[30] Error of an absolute power measurement with respect to temperature.

[31] The operating temperature range defines the span of ambient temperature in which the instrument complies with specifications. In the permissible temperature range, the instrument is still functioning but compliance with specifications is not warranted.

[32] To operate the R&S®NRP33SN-V/67SN-V at an air pressure below 795 hPa the sensor has to be mounted onto a temperature-controlled baseplate. In this case the temperature of the baseplate is regarded as the ambient temperature of the sensor.

[33] Quotient of a measured and a stored power ratio, e.g. for measuring gain compression of amplifiers.

[34] Guaranteed by design and the specifications of the internal oscillator.

[35] For extended periods, contact your Rohde & Schwarz sales office.

Service at Rohde & Schwarz
You're in great hands

- ► Worldwide
- ► Local and personalized
- ► Customized and flexible
- ► Uncompromising quality
- ► Long-term dependability

Rohde & Schwarz

The Rohde & Schwarz technology group is among the trailblazers when it comes to paving the way for a safer and connected world with its leading solutions in test & measurement, technology systems and networks & cybersecurity. Founded more than 90 years ago, the group is a reliable partner for industry and government customers around the globe. The independent company is headquartered in Munich, Germany and has an extensive sales and service network with locations in more than 70 countries.

www.rohde-schwarz.com

Sustainable product design

- ▶ Environmental compatibility and eco-footprint
- ▶ Energy efficiency and low emissions
- ▶ Longevity and optimized total cost of ownership

Certified Quality Management
ISO 9001

Certified Environmental Management
ISO 14001

More certificates of Rohde & Schwarz

Rohde & Schwarz training

www.training.rohde-schwarz.com

Rohde & Schwarz customer support

www.rohde-schwarz.com/support

R&S® is a registered trademark of Rohde & Schwarz GmbH & Co. KG
Trade names are trademarks of the owners
PD 3607.0852.22 | Version 17.00 | August 2025 (sk)
R&S®NRP Power Meter Family
Data without tolerance limits is not binding | Subject to change
© 2014 - 2025 Rohde & Schwarz | 81671 Munich, Germany